Integrated Quantum Photonics

K Aungskunsiri, D Bonneau, E Engin, D Fry, J Hadden, P Kalasuwan, J Kennard, T Lawson, L Marseglia, E Martin-Lopez, J Matthews, J Meinecke, A Peruzzo, K Poulios, A Santamato, P Shadbolt, A Stanley-Clark, M Halder, J Harrison, D Ho, P Jiang, A Laing, M Lobino, A Politi, B Patton, M Rodas Verde, P Zhang, X-Q Zhou, M Cryan, J Rarity, M Thompson, S Yu, J O'Brien & *non-Bristol collaborators*

Centre for Quantum Photonics, H. H. Wills Physics Laboratory and Department of Electrical and Electronic Engineering, University of Bristol, UK

£: NOKIA EPSRC Engineering and Physical Sciences Research Council THE ROYAL SOCIETY CELEBRATING 350 YEARS

€: erc QESS DIAMANT QUANTIP SEVENTH FRAMEWORK PROGRAMME phorbitech

$: AIR FORCE OFFICE OF SCIENTIFIC RESEARCH UNITED STATES AIR FORCE DARPA

¥: JAPAN SOCIETY FOR THE PROMOTION OF SCIENCE · FOUNDED 1932 · TOSHIBA The Daiwa Anglo-Japanese Foundation

Professor Jeremy O'Brien
Director of CQP

Professor John Rarity
Head of Photonics

Dr Ruth Oulton
Lecturer

Dr Mark Thompson
Lecturer

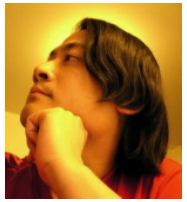

Dr Ying-Lung Daniel Ho
Research Fellow

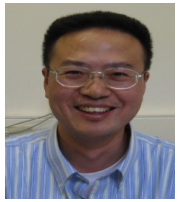

Dr Chengyong Hu
Research Fellow

Dr Pisu Jiang
Research Fellow

Dr Anthony Laing
Research Fellow

Dr Mirko Lobino
Research Fellow

Dr Brian Patton
Research Fellow

Dr Alberto Politi
Research Fellow

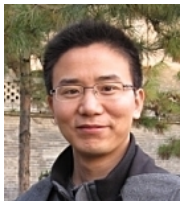

Dr Pei Zhang
Research Fellow

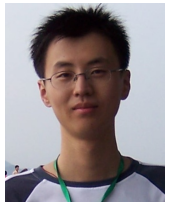

Dr Xiao-Qi Zhou
Research Fellow

Kanin Aungskunsiri
PhD student

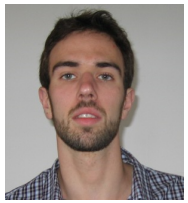

Bryn Bell
PhD student

Damien Bonneau
PhD student

Stewart Carswell
PhD student

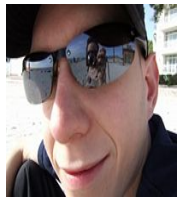

Alex Clark
PhD student

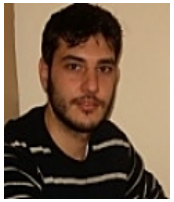

Erman Engin
PhD student

Daniel Fry
PhD student

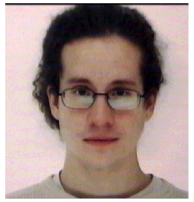

Ryan Gibson
PhD student

JP Hadden
PhD student

Pruet (Cal) Kalasuwan
PhD student

Jake Kennard
PhD student

Sebastian Knauer
PhD student

Tom Lawson
PhD student

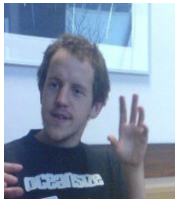

David Lowndes
PhD Student

Luca Marseglia
PhD student

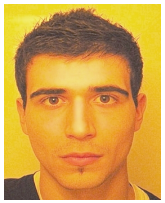

Enrique Martin-Lopez
PhD student

Jonathan Matthews
PhD student

Jasmin Meinecke
PhD student

Alberto Peruzzo
PhD student

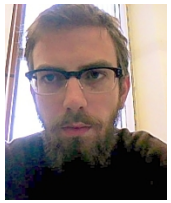

Kostas Poulios
PhD student

Alberto Santamato
PhD student

Peter Shadbolt
PhD student

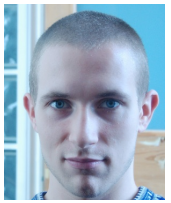

Antony Stanley-Clarke
PhD student

Arthur Thijssen
PhD student

Andrew Young
PhD student

David Wilby
DTC Project Student

Edward Bray
Masters student

Jacques Carolan
Masters student

Srikanth Kannan
Masters student

Jack Munns
Masters student

Jr-Han Tai
Masters student

Tristram Warren
Masters student

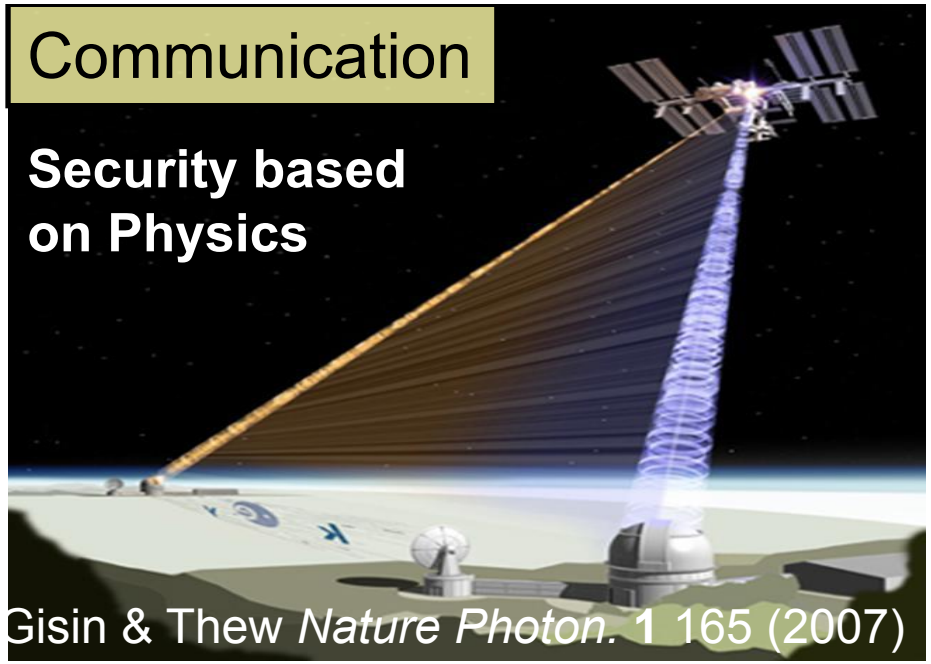
Communication
Security based on Physics
Gisin & Thew *Nature Photon.* **1** 165 (2007)

Computation
Tremendous power
Ladd, Jelezko, Laflamme, Nakamura, Monroe, O'Brien, *Nature* **464,** 45 (2010)

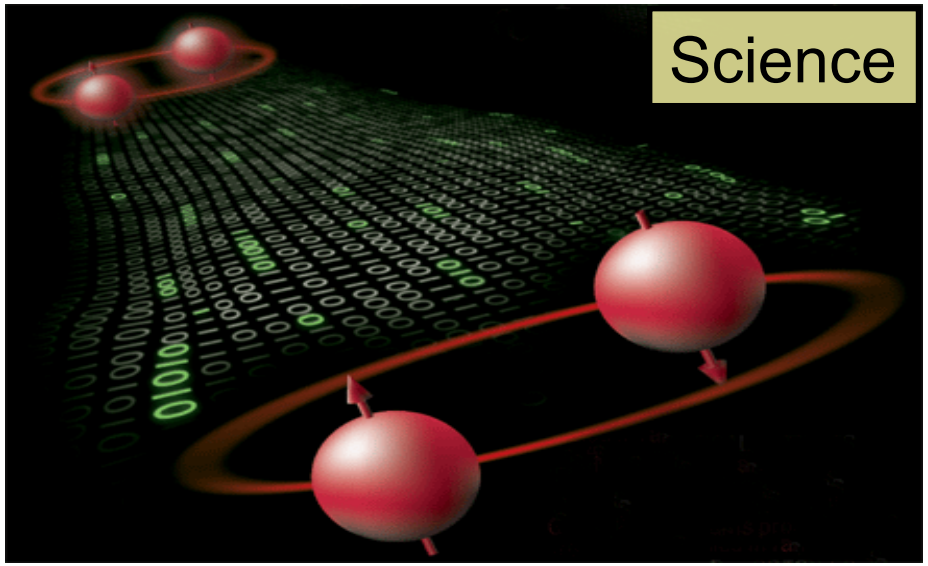
Science

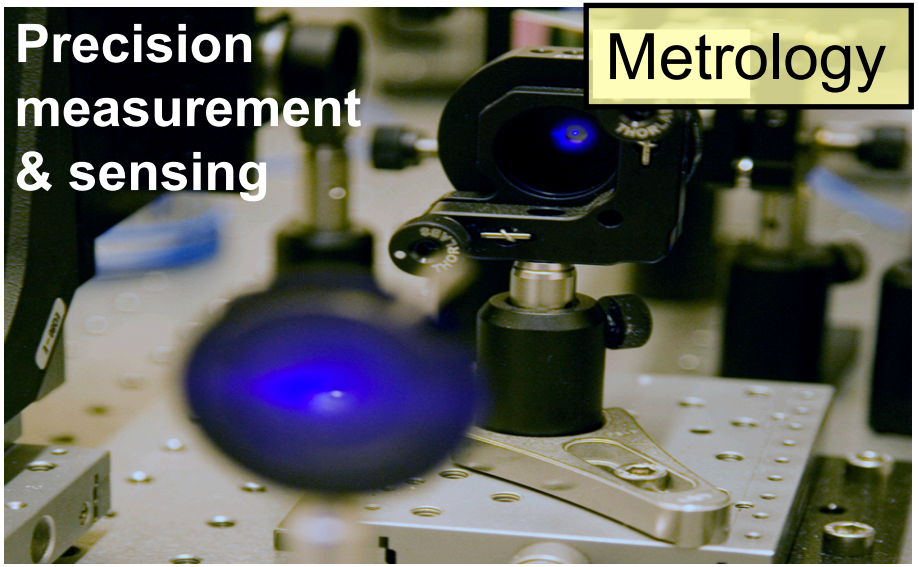
Precision measurement & sensing
Metrology

Communication

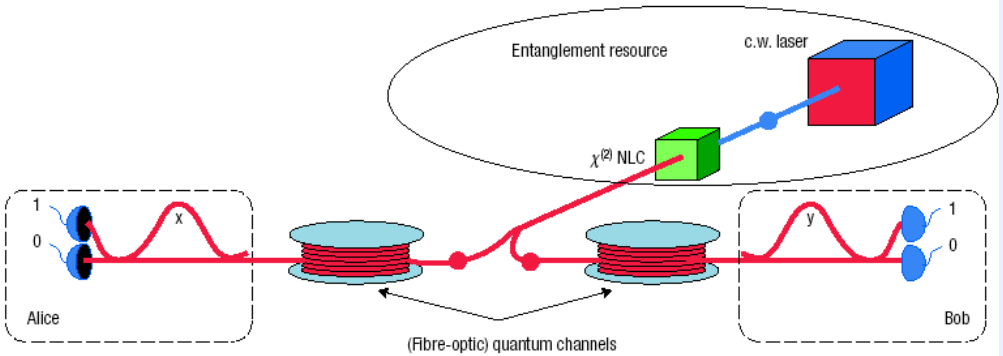

Gisin & Thew *Nature Photon.* **1** 165 (2007)

Computation

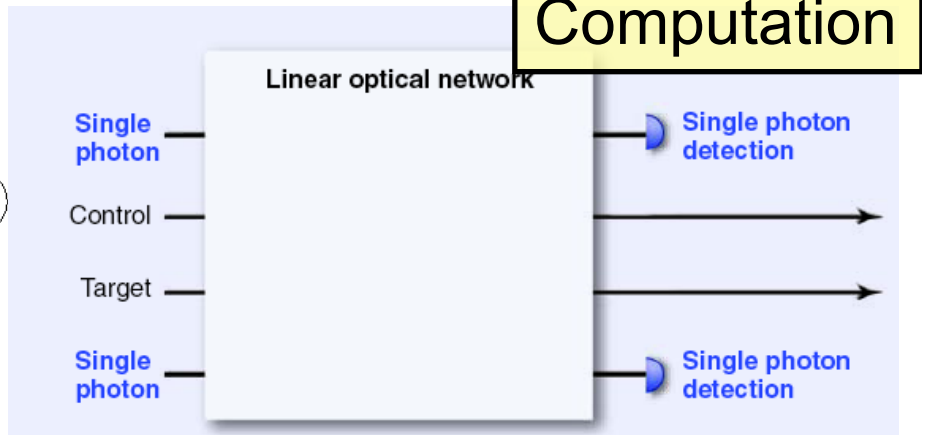

Knill, Laflamme, Milburn *Nature* **409,** 46 (2001)
Ladd, Jelezko, Laflamme, Nakamura, Monroe, O'Brien, *Nature* **464,** 45 (2010)

Science

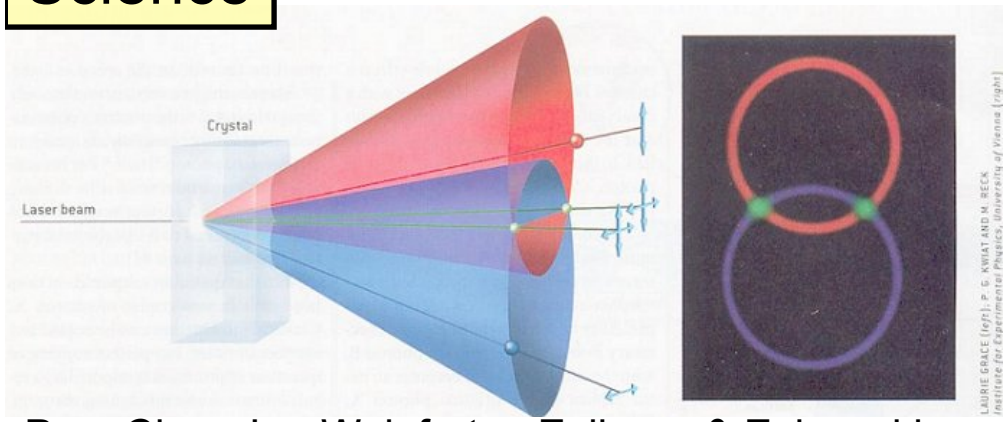

Pan, Chen, Lu, Weinfurter, Zelinger & Zukowski *Rev. Mod. Phys.*

Metrology

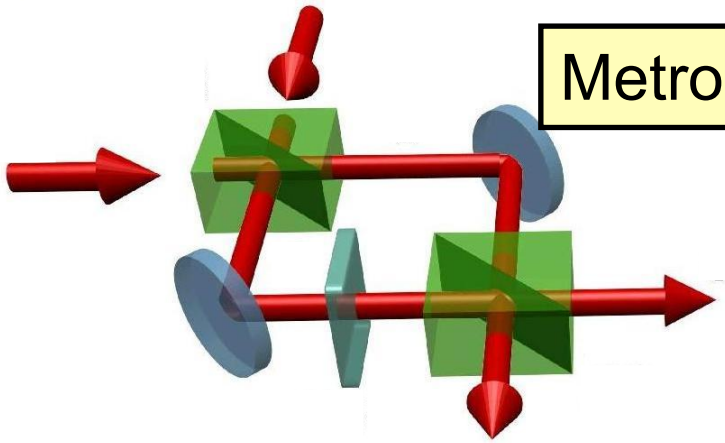

Giovannetti, Lloyd, Maccone *Science* **306**, 1330 (2004)

JL O'Brien, A Furusawa, J Vuckovic
Nature Photonics, **3**, 687 (2009)

Outline

- Photonic QIS&T
- Integrated Quantum Photonics
- Quantum **Circuits**
  - Scaling,
  - Reconfigurability,
  - Miniaturization
- Single Photon **Sources**
- Single Photon **Detectors**
- Single Photon **Fast manipulation**

Encoding Quantum Information in Photons

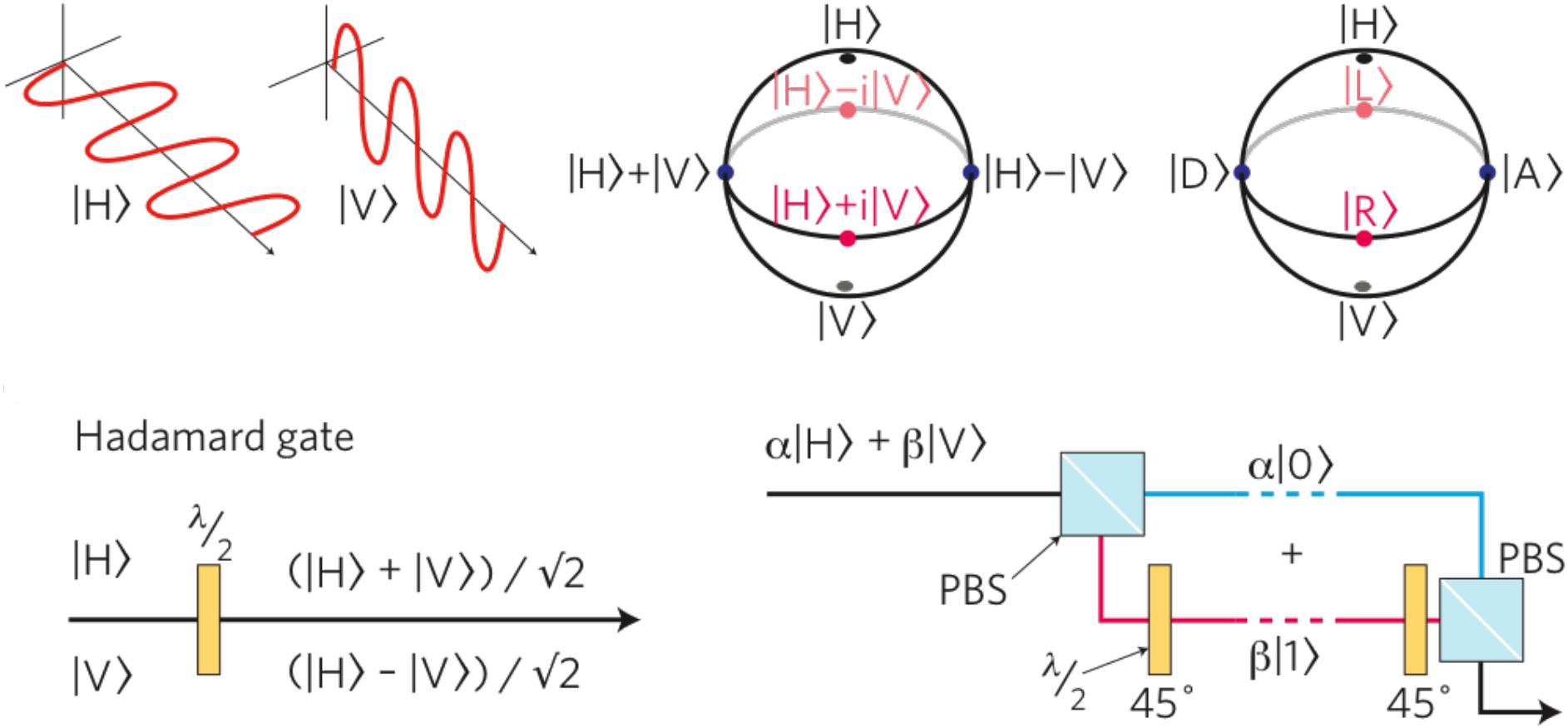

JL O'Brien *Science*, **318**, 5856 (2007)

(Photons Simulating Fermions)

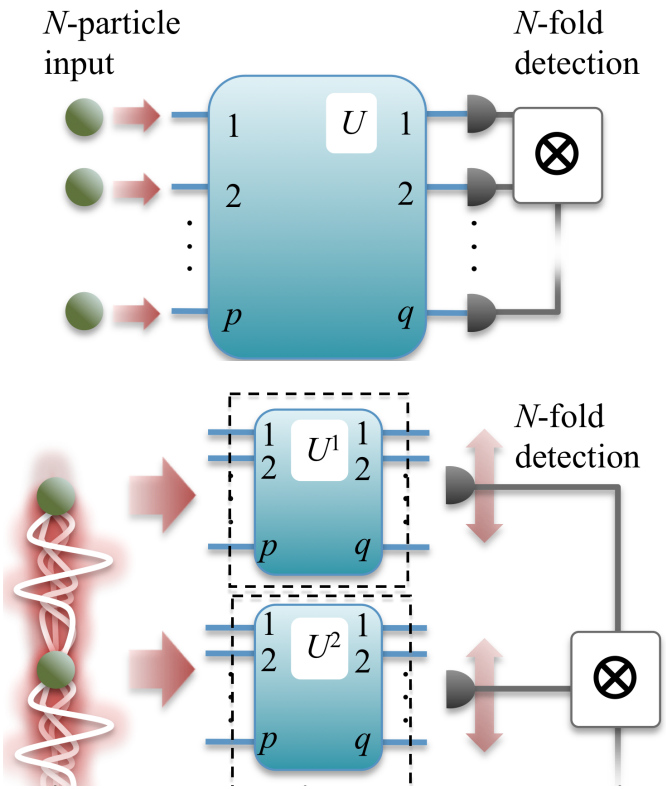

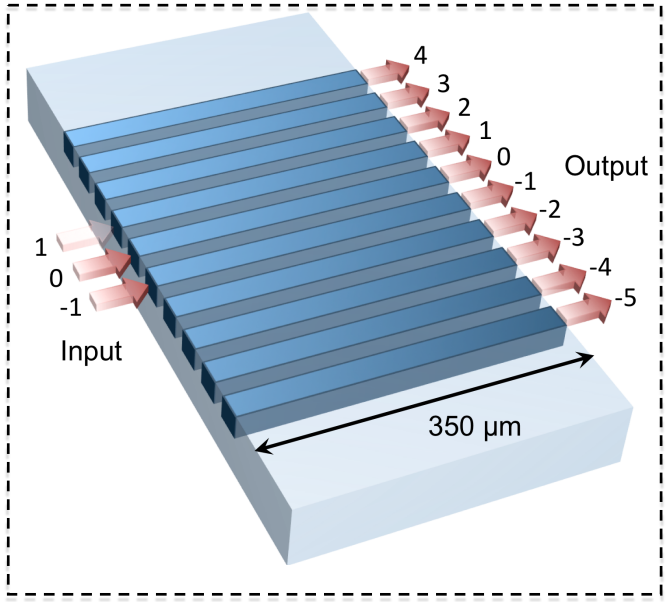

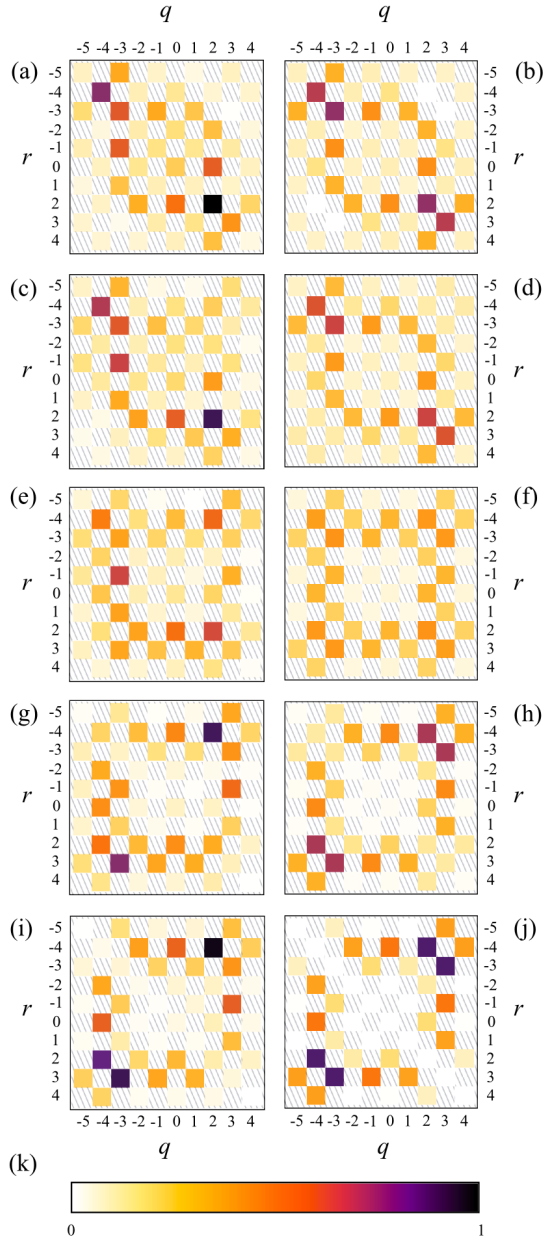

University of BRISTOL

Matthews, Poulios, Meinecke, Politi, Peruzzo, Ismail, W¨orhoff, Thompson, and O'Brien ***arXiv:1106.1166***

2-photon interactions?

KLM's solution

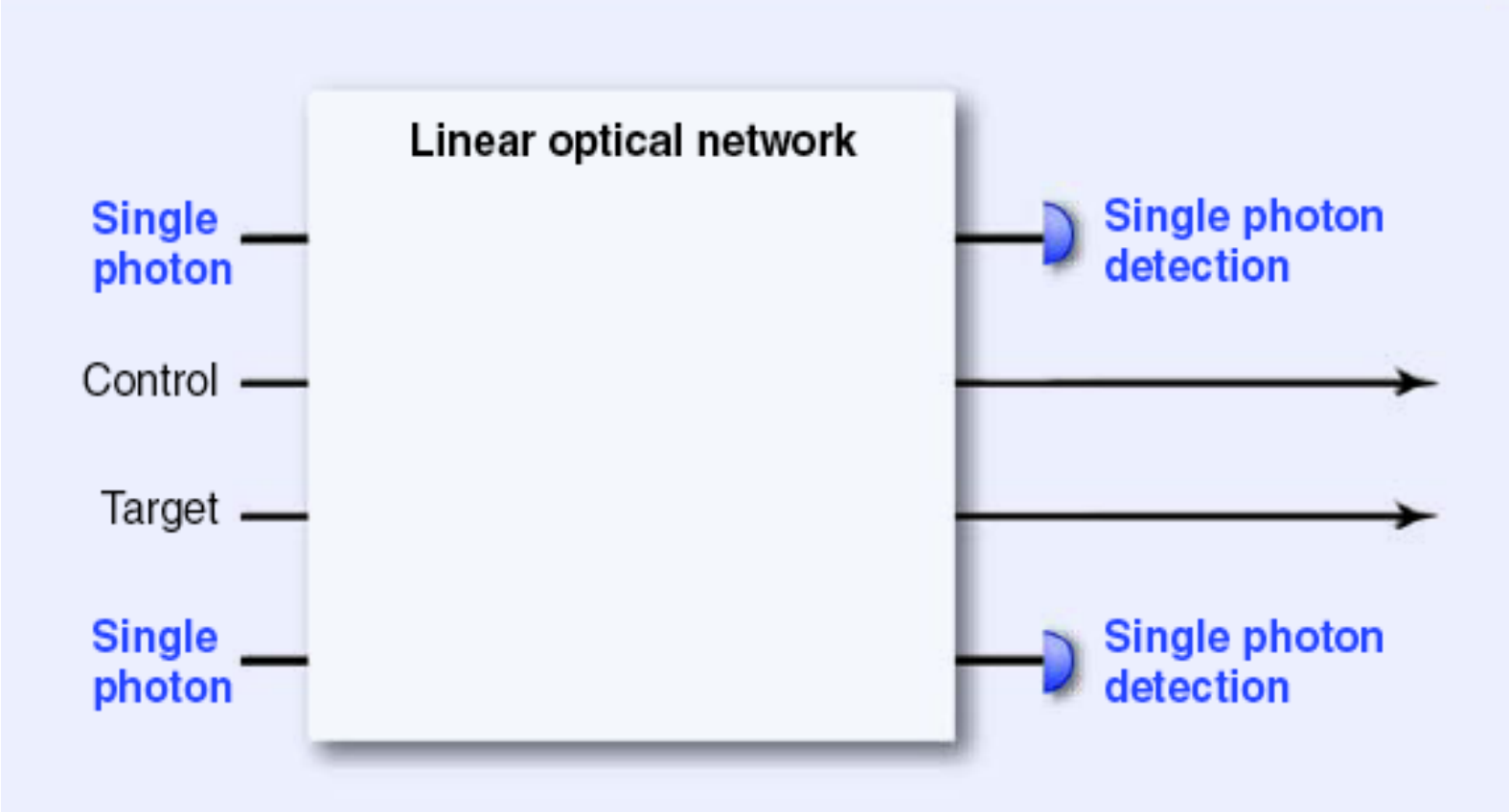

Knill, Laflamme and Milburn
Nature **409**, 46 (2001)

Integrated quantum photonics

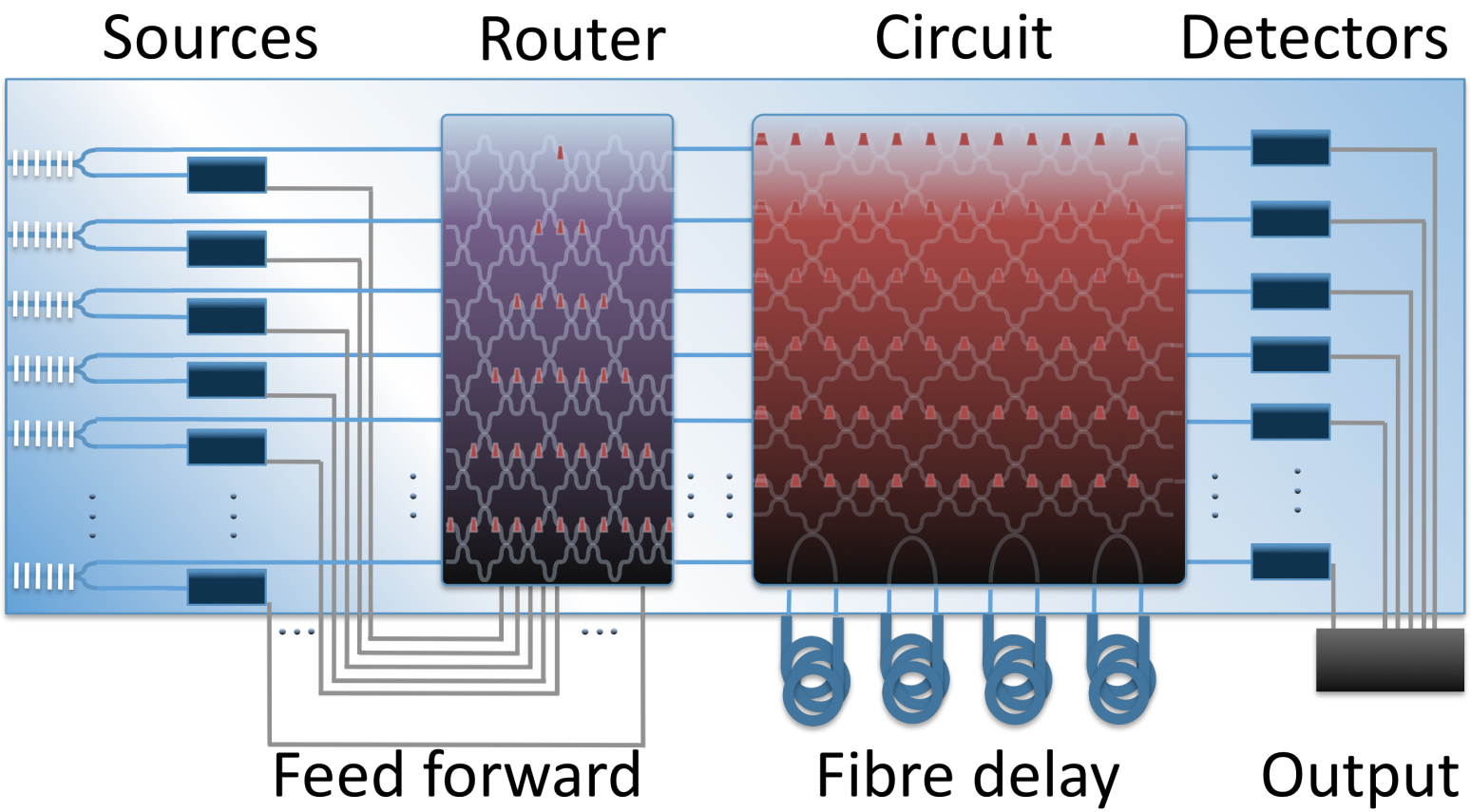

Communication

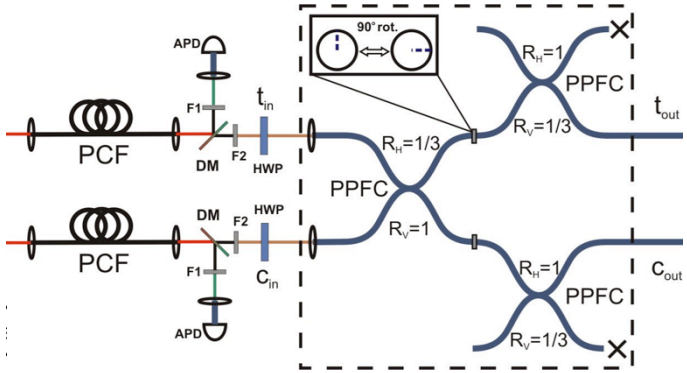

Clark, Fulconis, Rarity, Wadsworth, O'Brien
***Phys. Rev. A* 79** 030303 (2009)

Computation

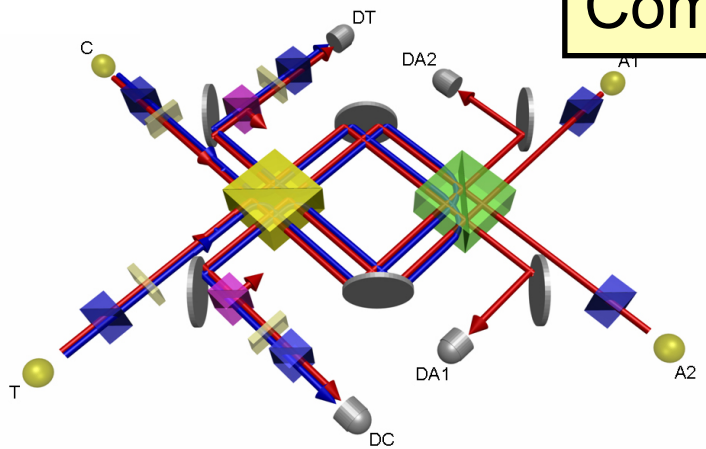

Okamoto, O'Brien, Hofmann, Takeuchi
***Proc. Natl. Ac. Sci.* 108** 10067 (2011)

Science

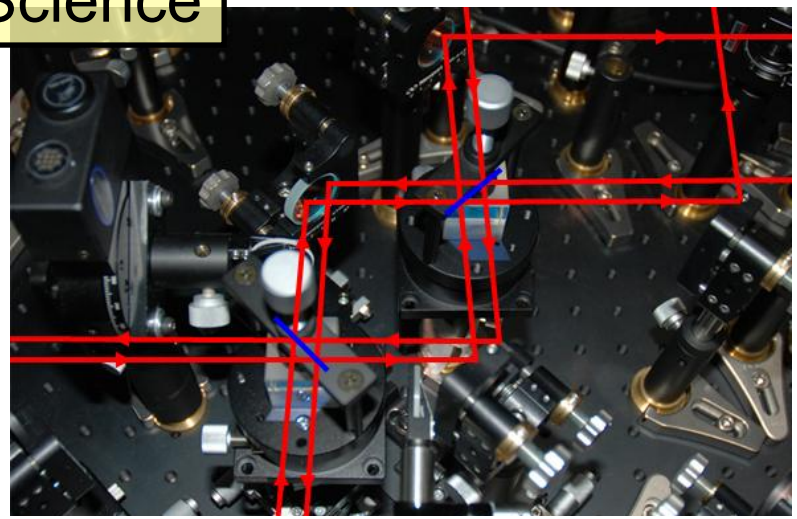

Okamoto, O'Brien, Hofmann, Nagata, Sasaki, Takeuchi ***Science*, 323** 483 (2009)

Metrology

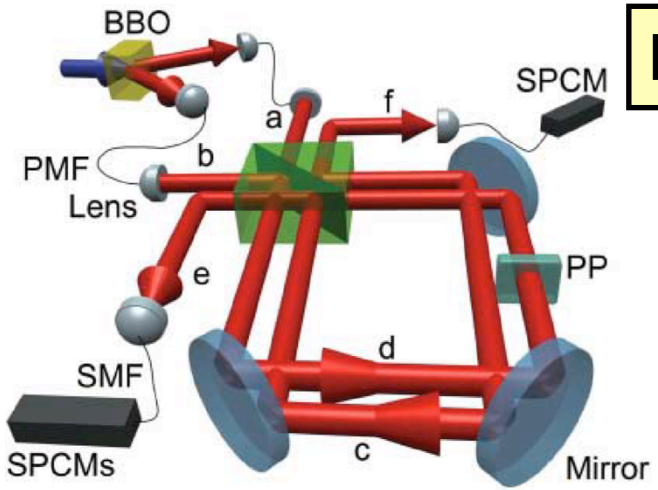

Nagata, Okamoto, O'Brien, Sasaki, Takeuchi
***Science*, 316** 726 (2007)

University of BRISTOL

Communication

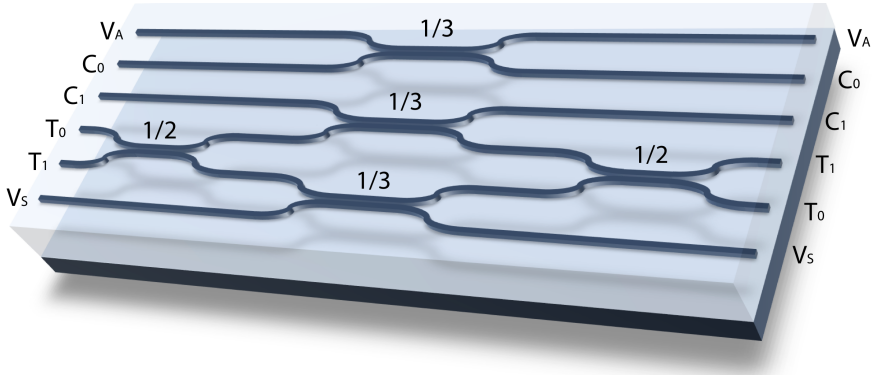

Politi, Cryan, Rarity, Yu, and O'Brien
***Science* 320**, 5876 (2008)

Computation

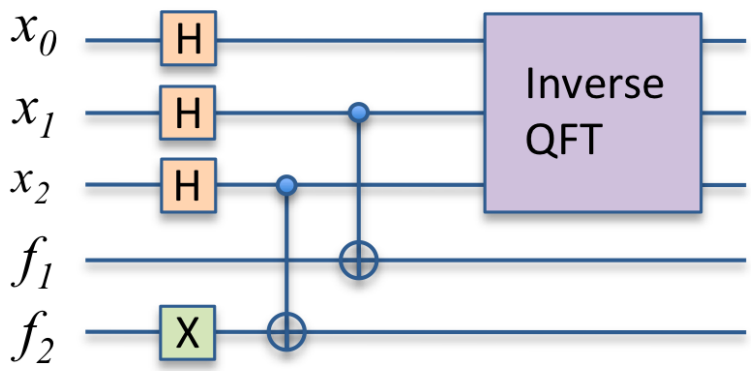

Politi, Matthews, O'Brien
***Science* 325** 1221 (2009)

Science

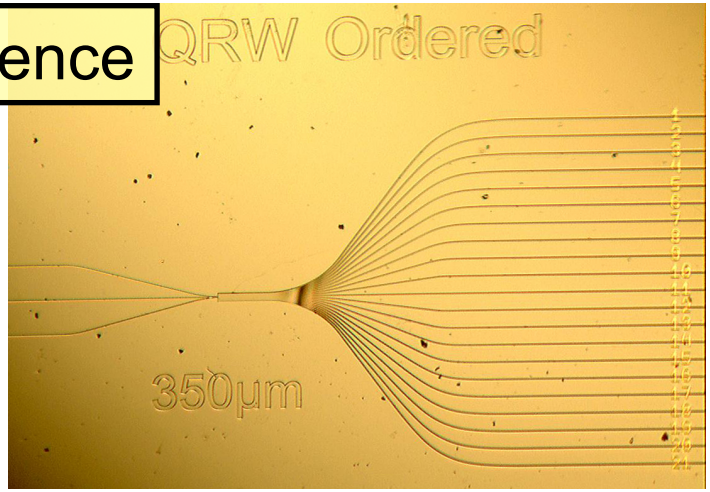

Peruzzo, Lobino, Matthews, Matsuda, *et al.*
***Science* 329** 1500 (2010)

Metrology

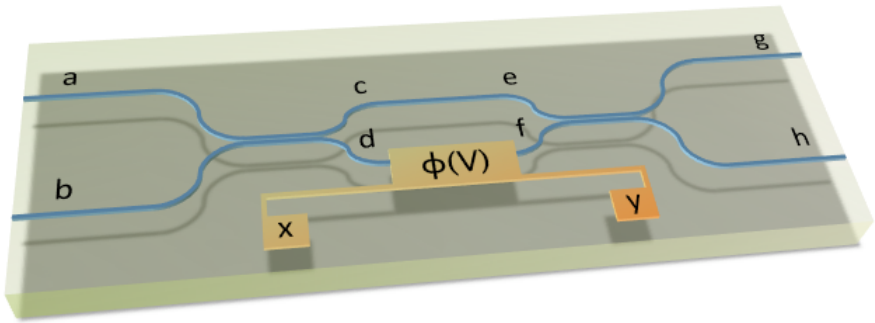

Matthews, Politi, Stefanov, O'Brien
***Nature Photonics* 3**, 346 (2009)

University of BRISTOL

Quantum factoring algorithm on a chip

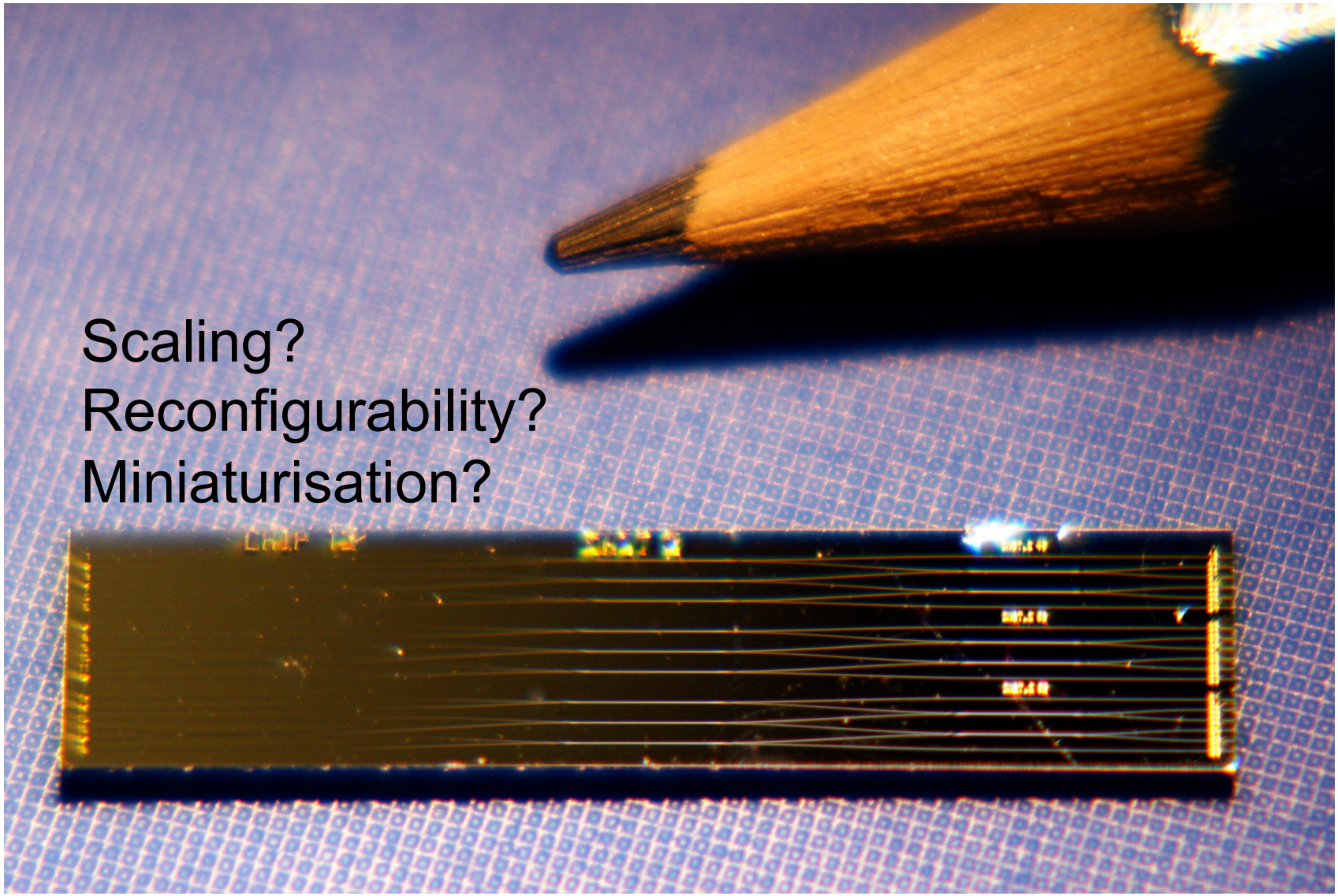

University of BRISTOL

Politi, Matthews, O'Brien
***Science* 325** 1221 (2009)

Quantum communication for mobile devices

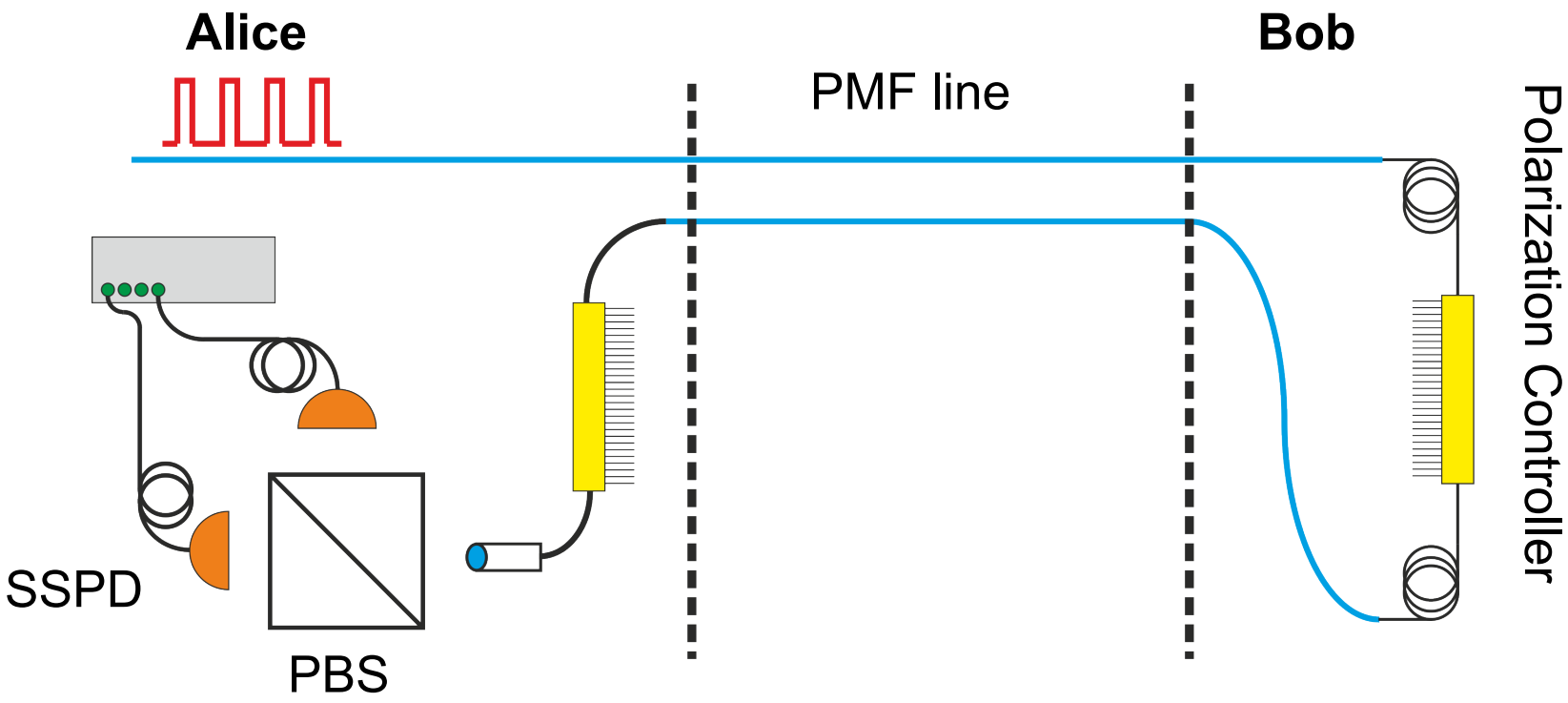

NOKIA

University of BRISTOL

Laing, Scarani, Rarity and O'Brien
***Phys. Rev. A* 82**, 012304 (2010)

Metrology: Heralded Entanglement

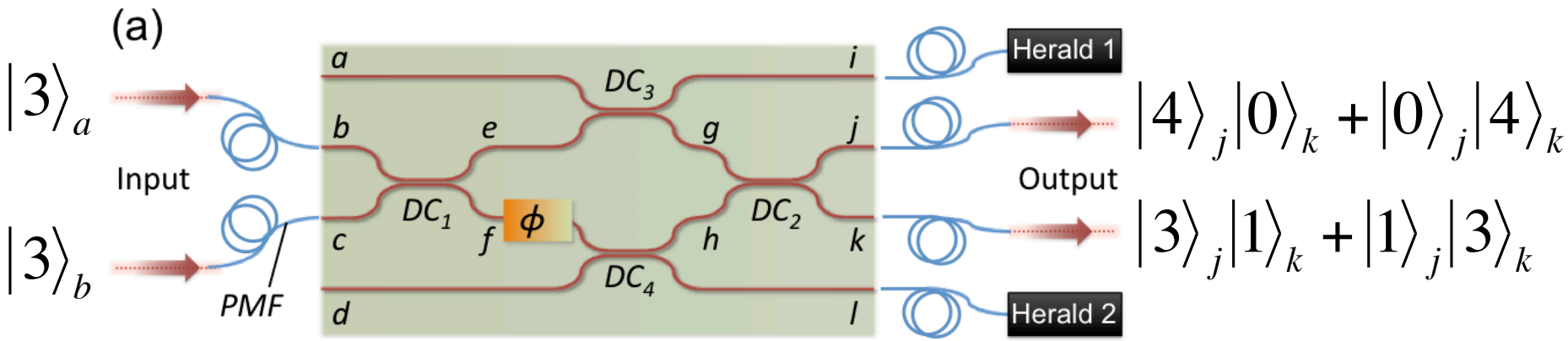

Lee, Kok, Cerf Dowling
Phys. Rev. A 65, 030101 (2002)

Matthews, Politi, Bonneau, O'Brien
Phys. Rev. Lett. **107**, 163602 (2011)

University of BRISTOL

Measuring protein concentration with entangled photons

POLITECNICO DI MILANO

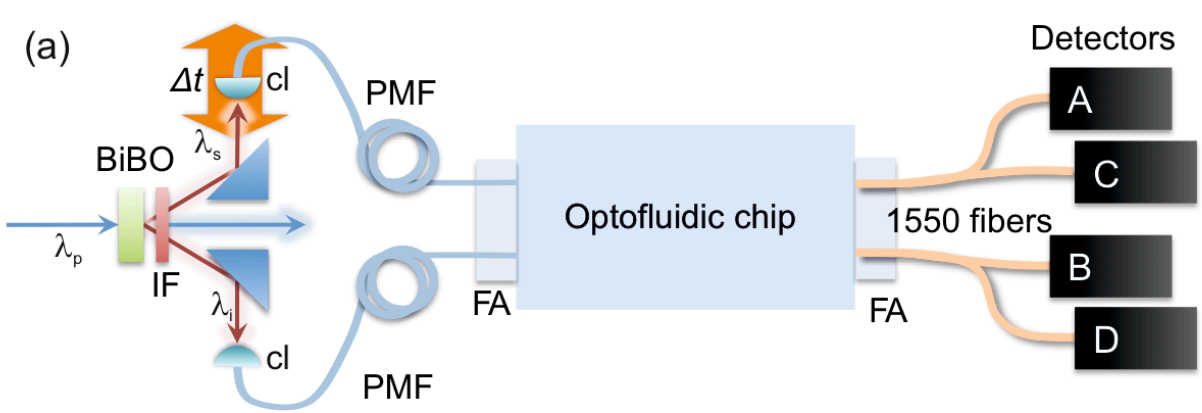

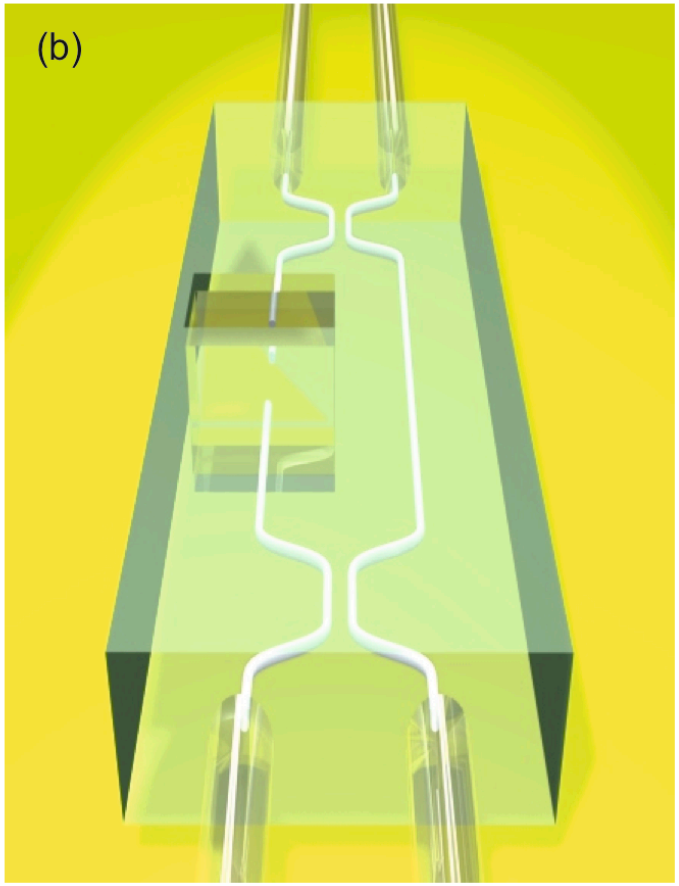

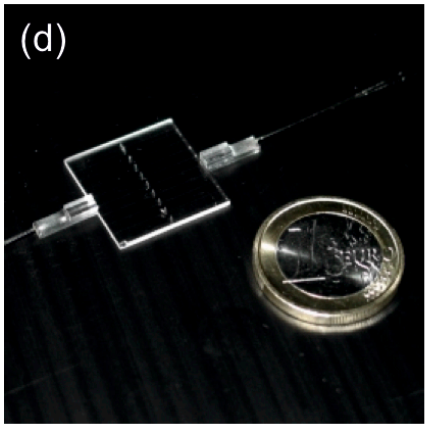

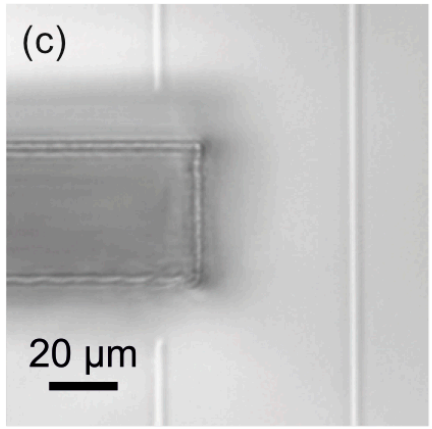

Crespi, Lobino, Matthews, Politi, Neal, Ramponi, Osellame, O'Brien

arXiv:1009.3128

University of BRISTOL

Guaranteed violation of a Bell inequality without aligned reference frames or calibrated devices

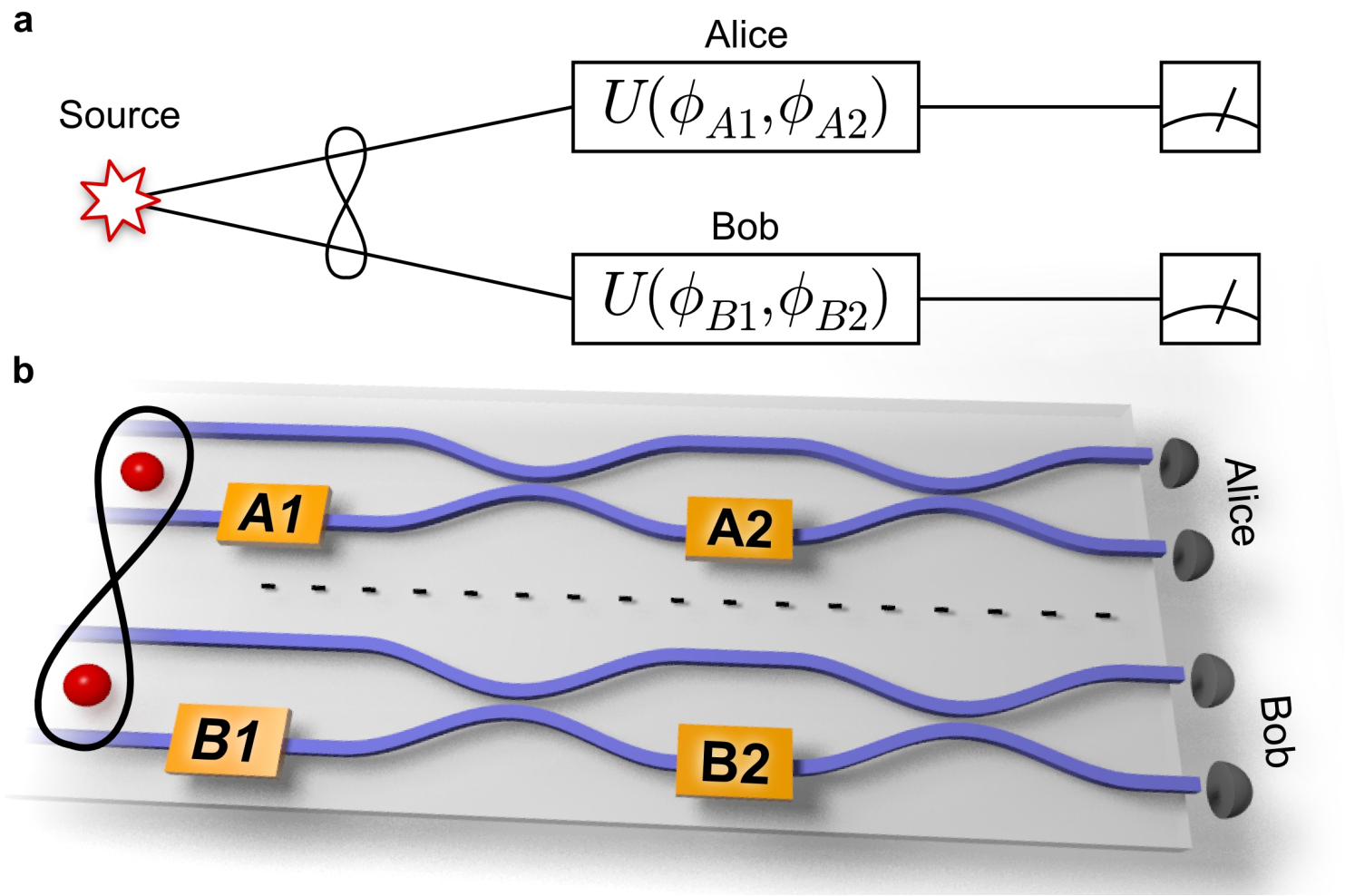

Shadbolt, Vértesi, Liang, Branciard, Brunner, O'Brien
arXiv:1111.1853

University of BRISTOL

Quantum factoring algorithm on a chip

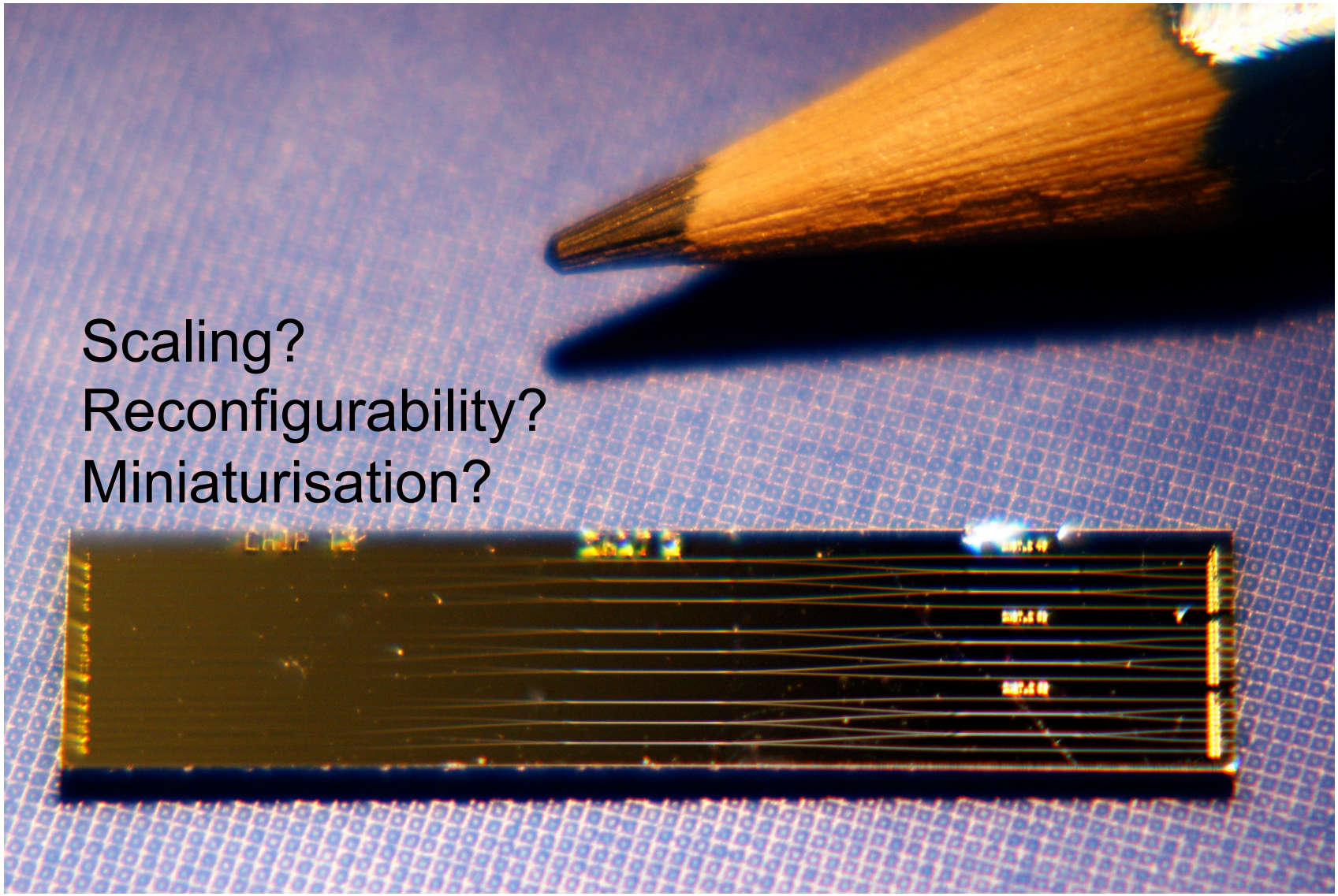

University of BRISTOL

Politi, Matthews, O'Brien
***Science* 325** 1221 (2009)

Scaling

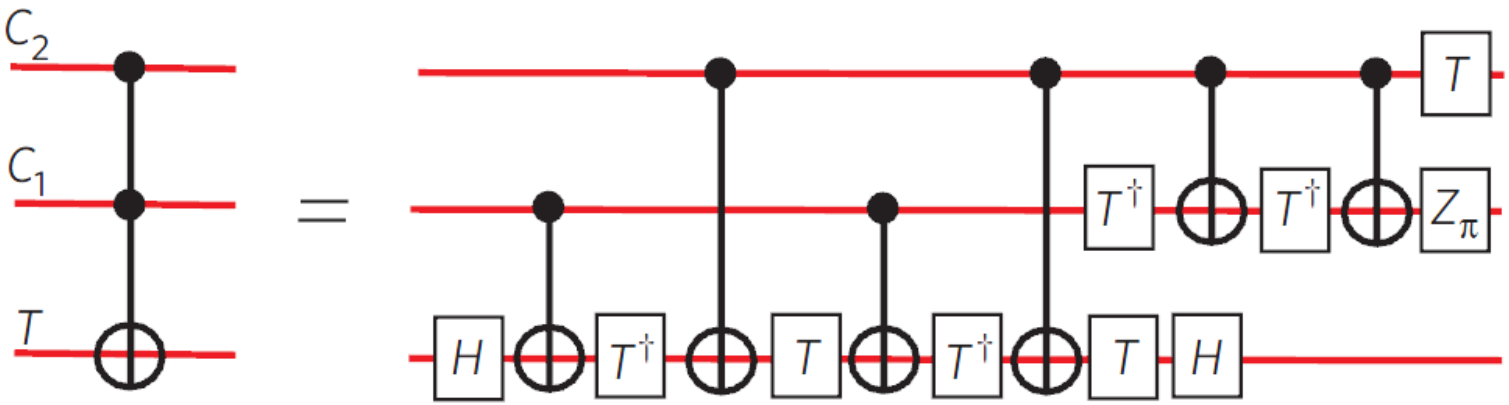

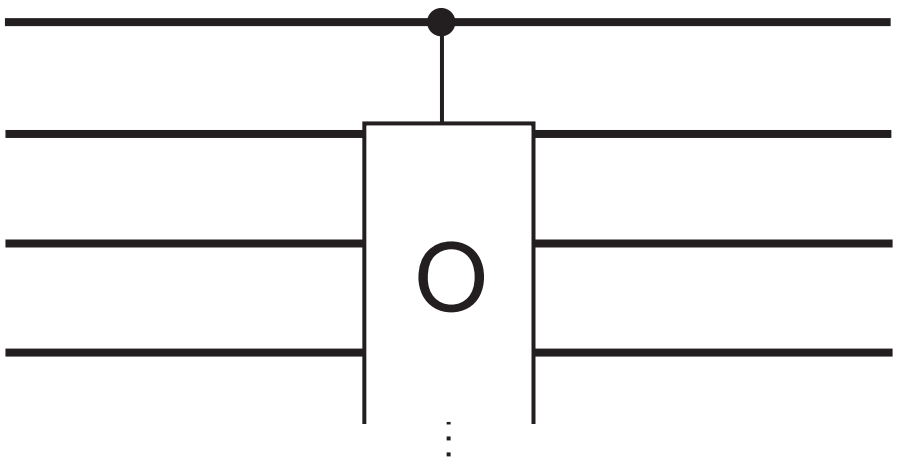

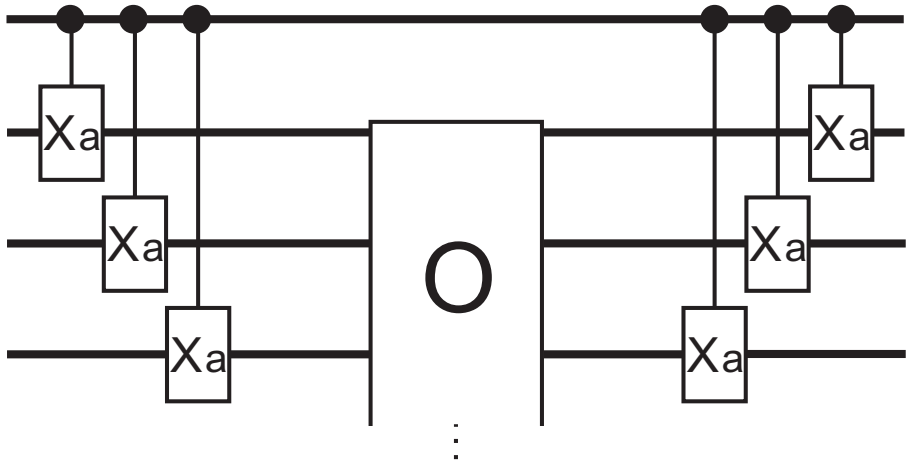

Zhou, Ralph, Kalasuwan, Zhang, Peruzzo, Lanyon, O'Brien
***Nature Communications* 2**, 413 (2011)

Scaling: Adding control to arbitrary quantum operations

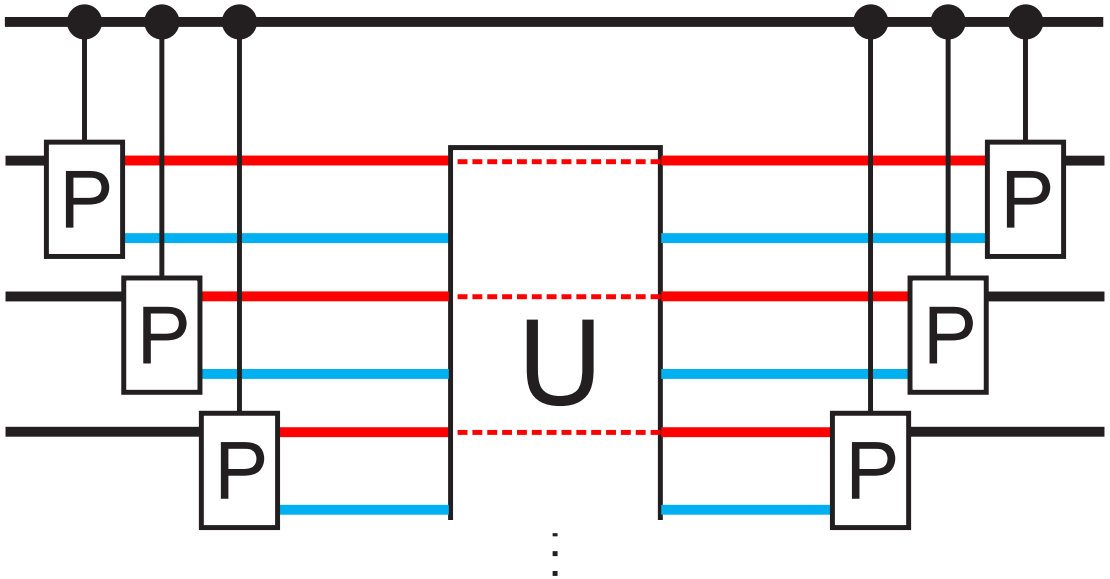

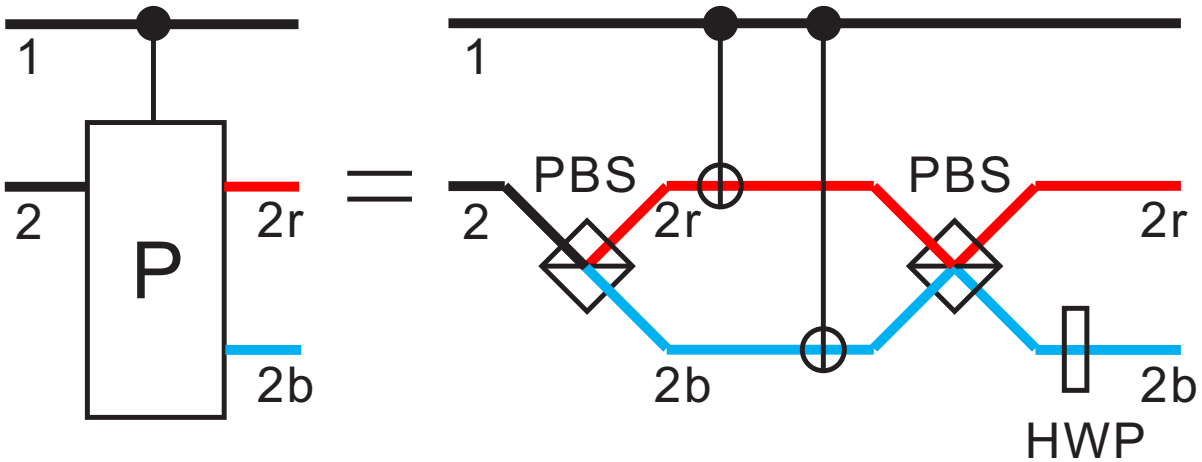

Zhou, Ralph, Kalasuwan, Zhang, Peruzzo, Lanyon, O'Brien
***Nature Communications* 2**, 413 (2011)

Adding control to arbitrary quantum operations

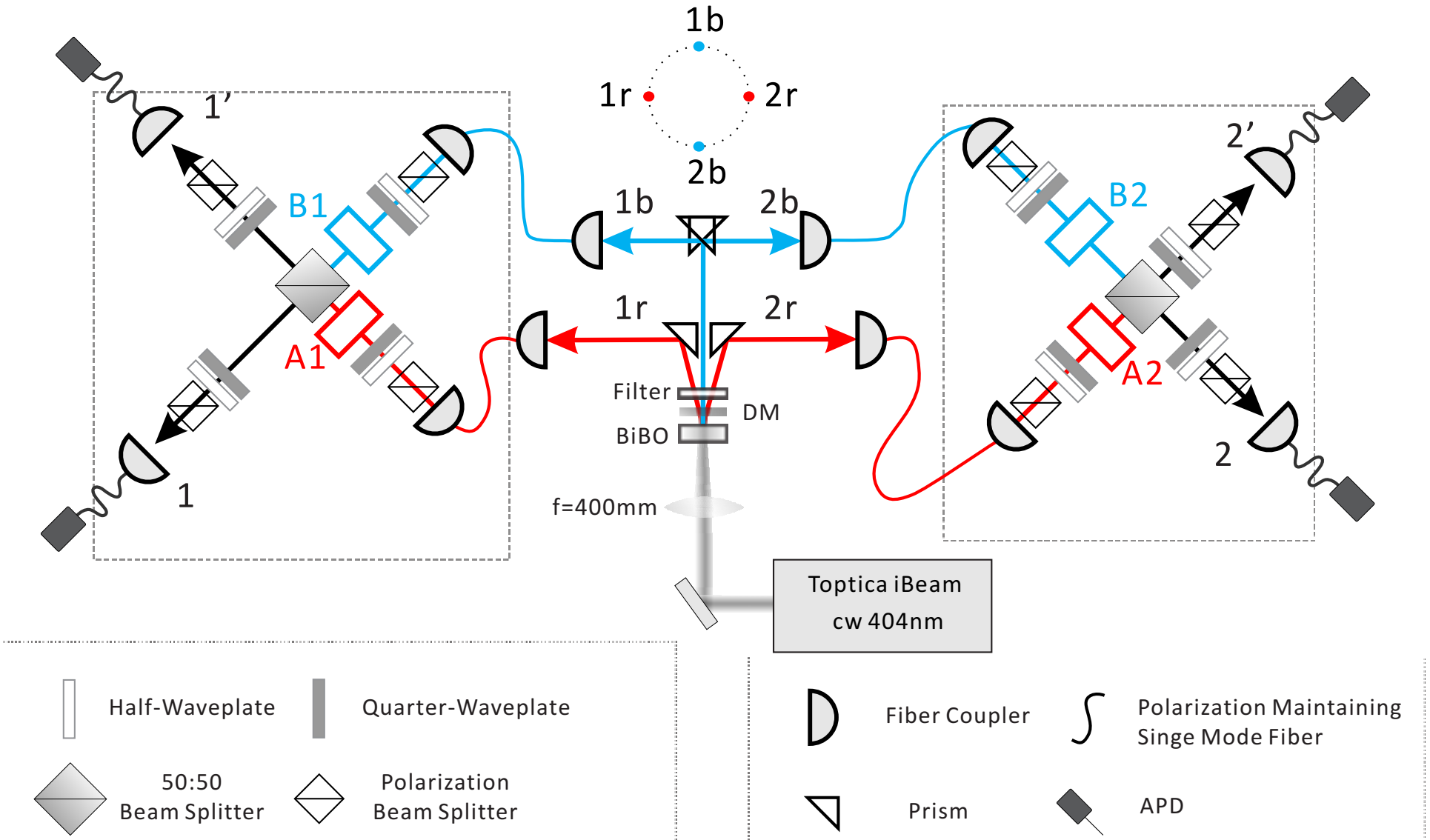

Zhou, Ralph, Kalasuwan, Zhang, Peruzzo, Lanyon, O'Brien
***Nature Communications* 2**, 413 (2011)

University of BRISTOL

Scaling: Adding control to arbitrary quantum operations

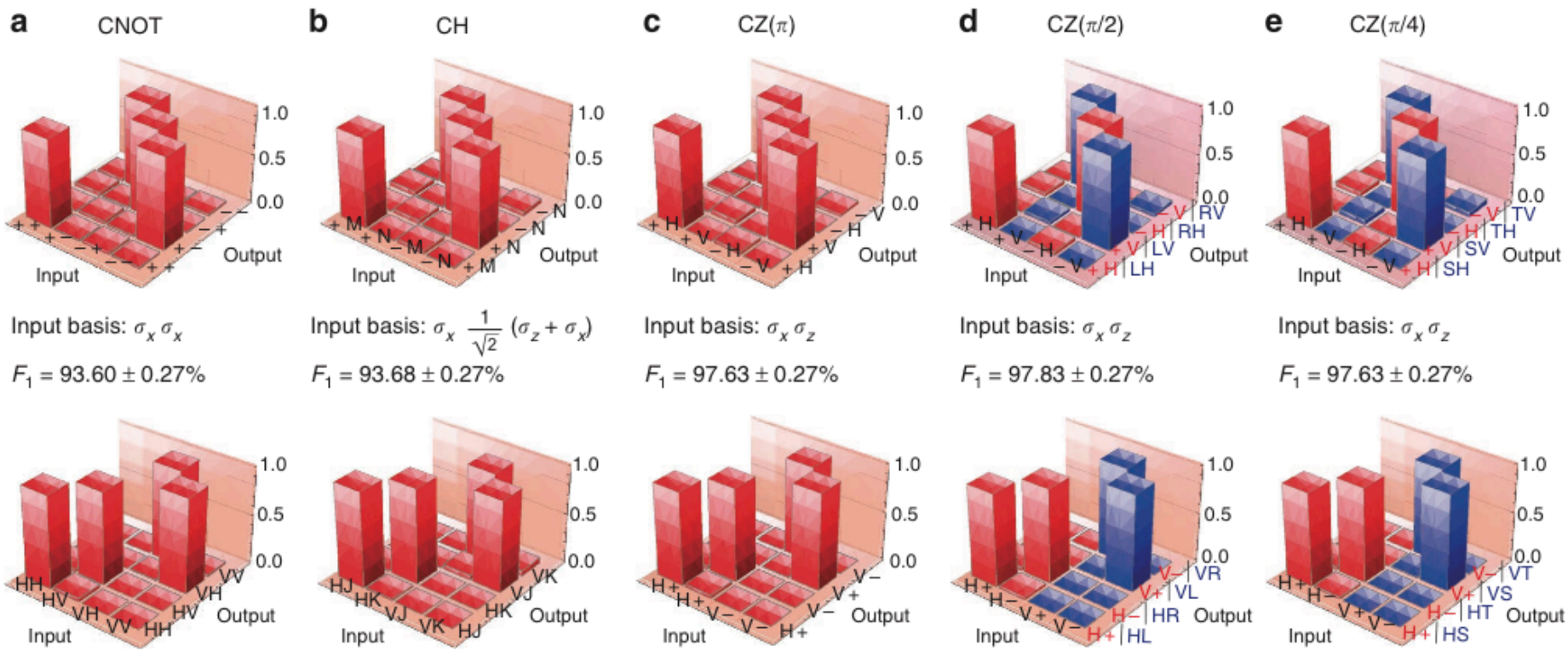

	a	b	c	d	e
Input basis	$\sigma_x \sigma_x$	$\sigma_x \frac{1}{\sqrt{2}}(\sigma_z + \sigma_x)$	$\sigma_x \sigma_z$	$\sigma_x \sigma_z$	$\sigma_x \sigma_z$
F_1	$93.60 \pm 0.27\%$	$93.68 \pm 0.27\%$	$97.63 \pm 0.27\%$	$97.83 \pm 0.27\%$	$97.63 \pm 0.27\%$
Input basis	$\sigma_x \sigma_x$	$\sigma_x \frac{1}{\sqrt{2}}(\sigma_z + \sigma_x)$	$\sigma_x \sigma_z$	$\sigma_z \sigma_x$	$\sigma_z \sigma_x$
F_1	$97.25 \pm 0.19\%$	$96.05 \pm 0.21\%$	$95.13 \pm 0.24\%$	$95.57 \pm 0.24\%$	$94.17 \pm 0.25\%$
F_P	$90.85\% \le F_P \le 93.60\%$	$89.71\% \le F_P \le 93.68\%$	$92.75\% \le F_P \le 95.13\%$	$93.40\% \le F_P \le 95.57\%$	$91.80\% \le F_P \le 94.17\%$
$\overline{F}$	$92.68\% \le \overline{F} \le 94.88\%$	$91.77\% \le \overline{F} \le 94.94\%$	$94.20\% \le \overline{F} \le 96.10\%$	$94.72\% \le \overline{F} \le 96.46\%$	$93.44\% \le \overline{F} \le 95.33\%$

University of BRISTOL

Zhou, Ralph, Kalasuwan, Zhang, Peruzzo, Lanyon, O'Brien
***Nature Communications* 2**, 413 (2011)

Scaling: Iterative phase estimation

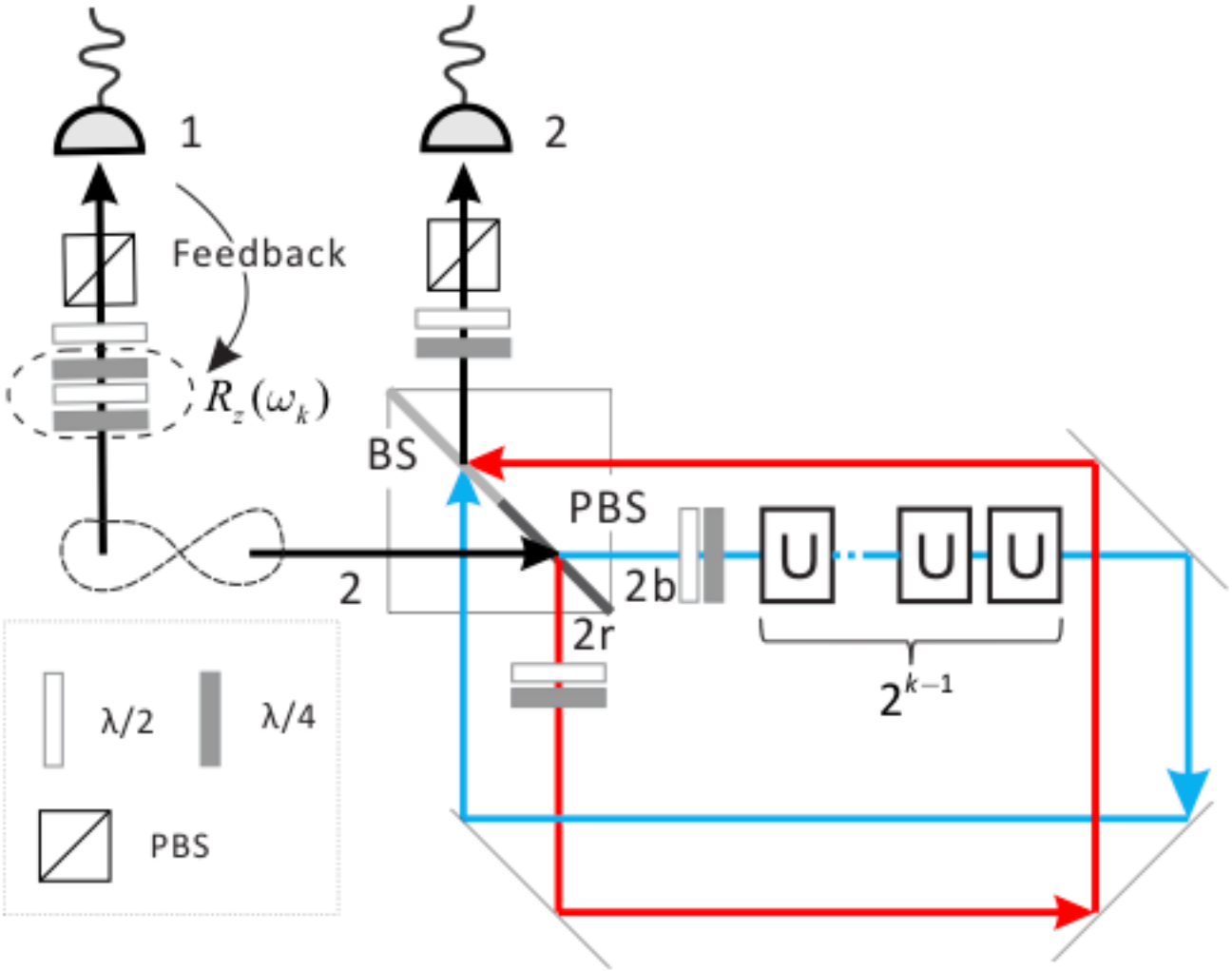

Zhou, Kalasuwan, Ralph, O'Brien
arXiv:1110.4276

Scaling: Factoring 21 with qubit recycling

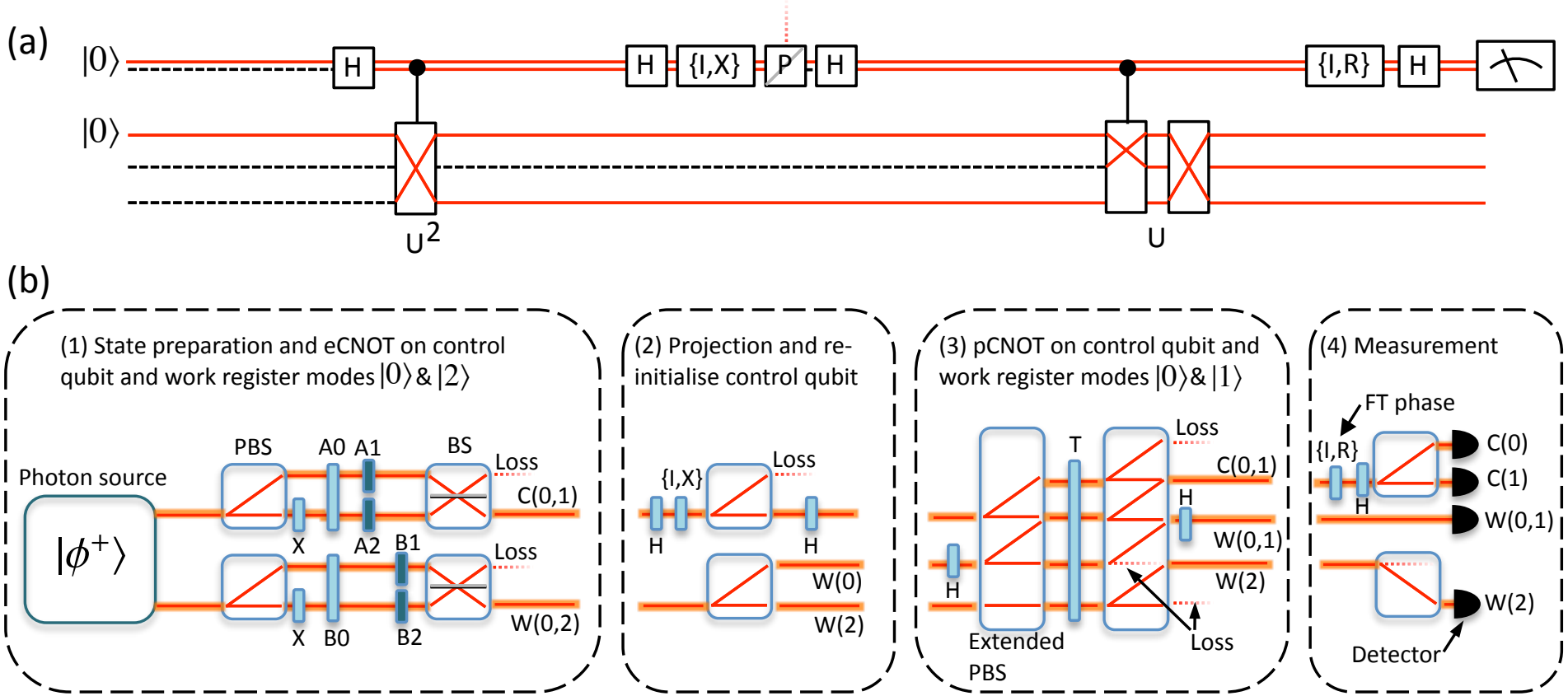

Martin Lopez, Laing, Lawson, Alvarez, Zhou, O'Brien

arXiv:1111.4147

University of BRISTOL

Reconfigurability

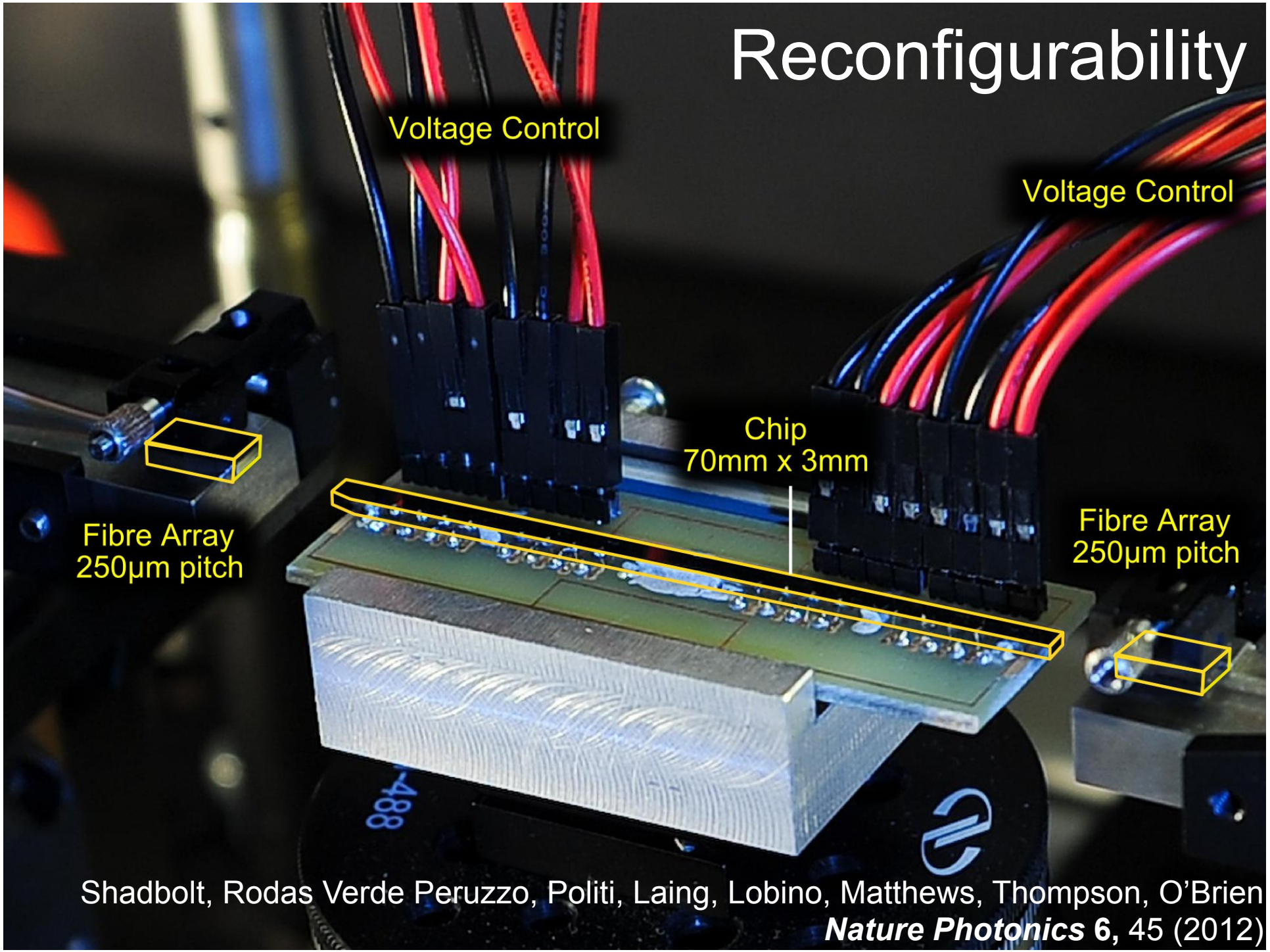

Shadbolt, Rodas Verde Peruzzo, Politi, Laing, Lobino, Matthews, Thompson, O'Brien
***Nature Photonics* 6,** 45 (2012)

Reconfigurable circuit

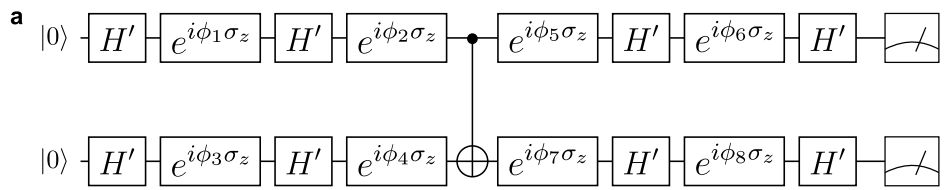

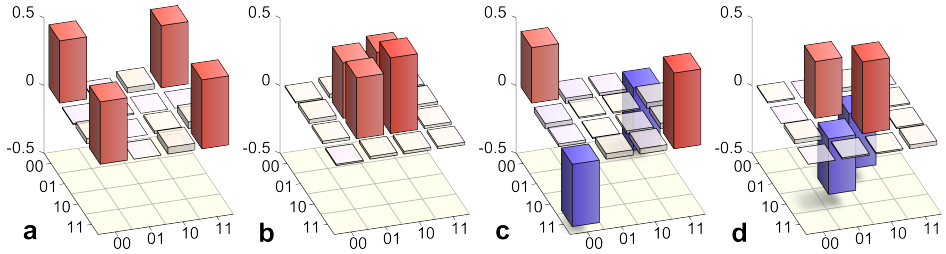

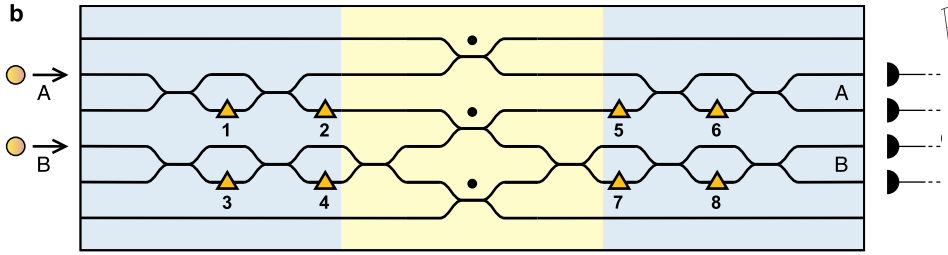

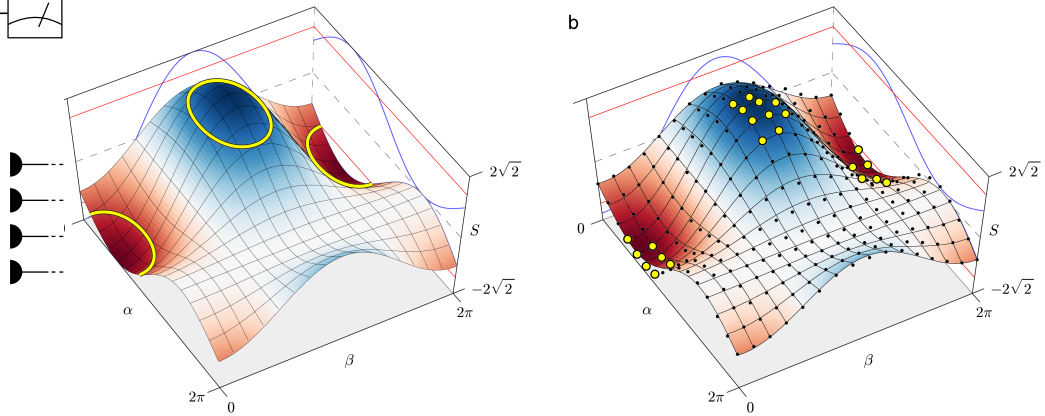

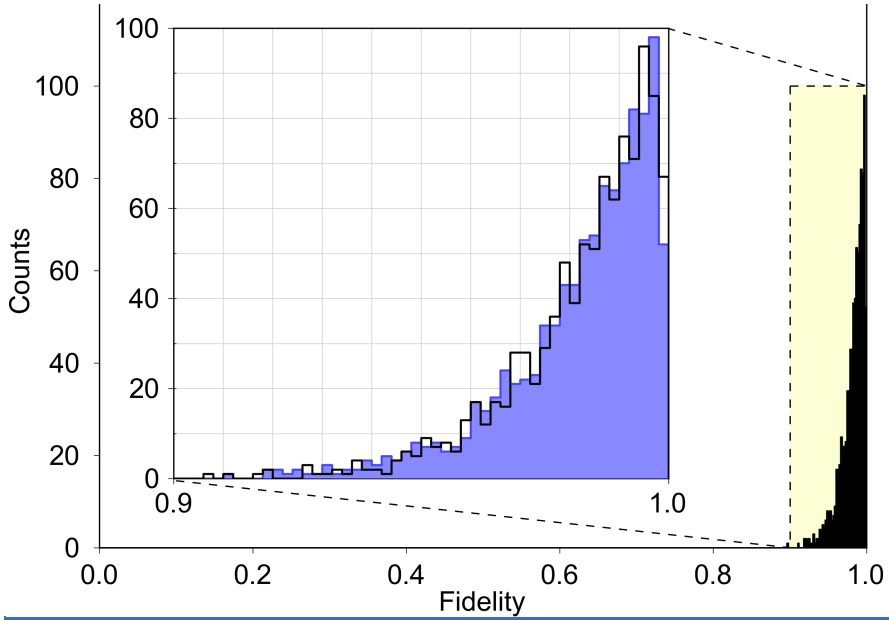

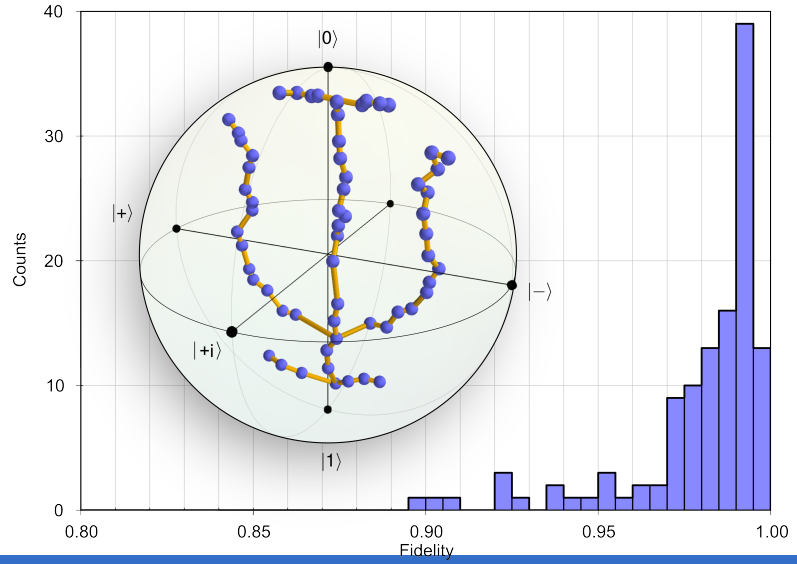

Shadbolt, Rodas Verde Peruzzo, Politi, Laing, Lobino, Matthews, Thompson, O'Brien

***Nature Photonics* 6,** 45 (2012)

University of BRISTOL

Miniaturisation 1: architectures

Imperial College London

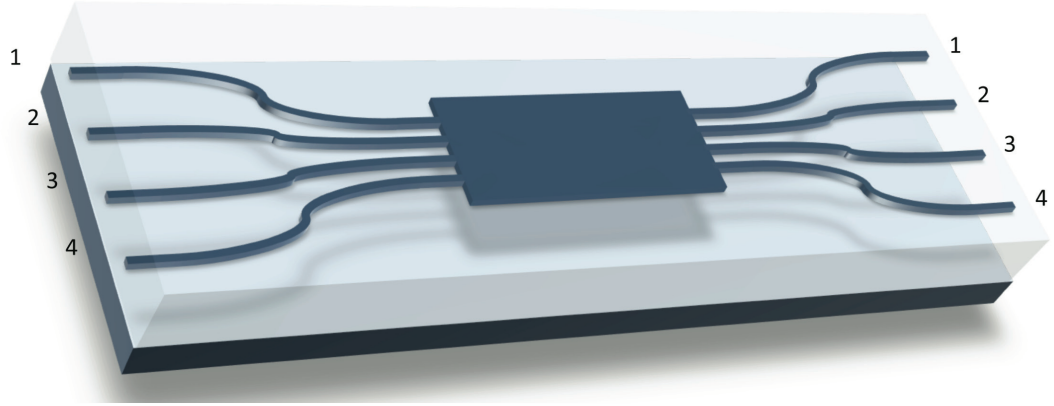

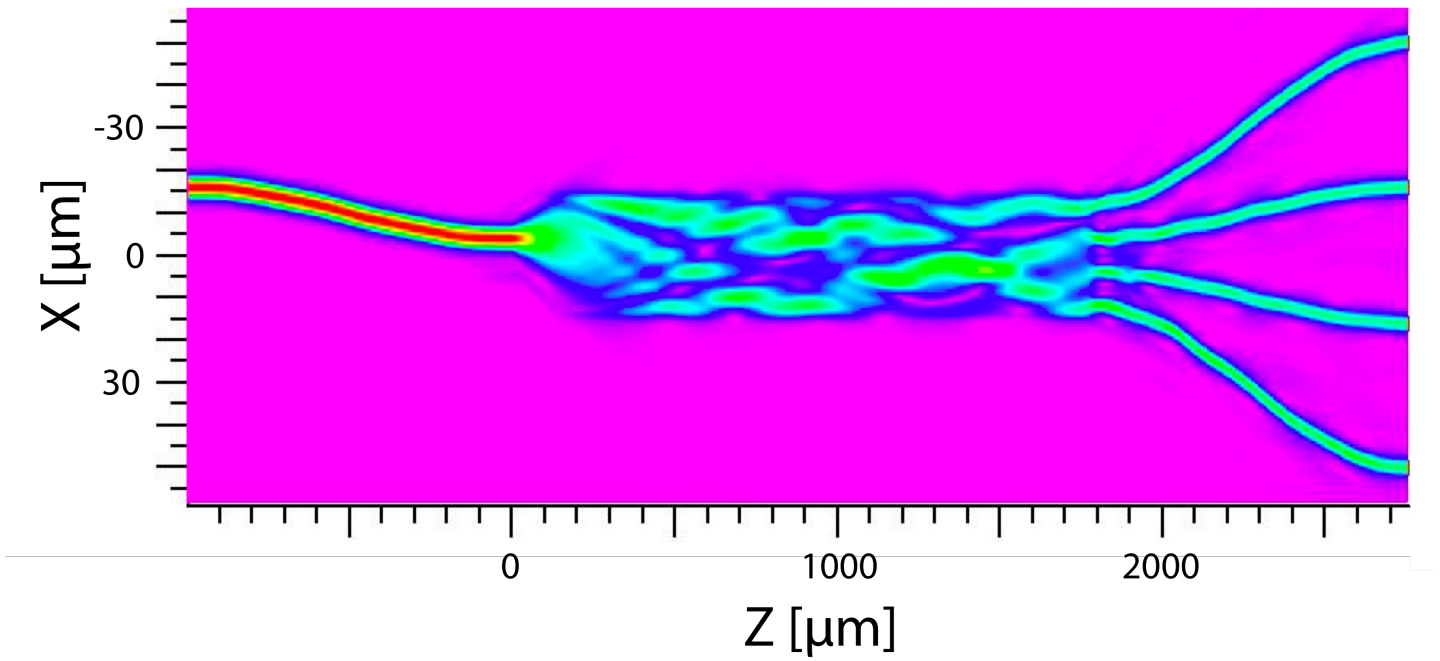

University of BRISTOL

Peruzzo, Laing, Politi, Rudolph, O'Brien
***Nature Communications* 2**, 224 (2011)

Quantum interference

Imperial College London

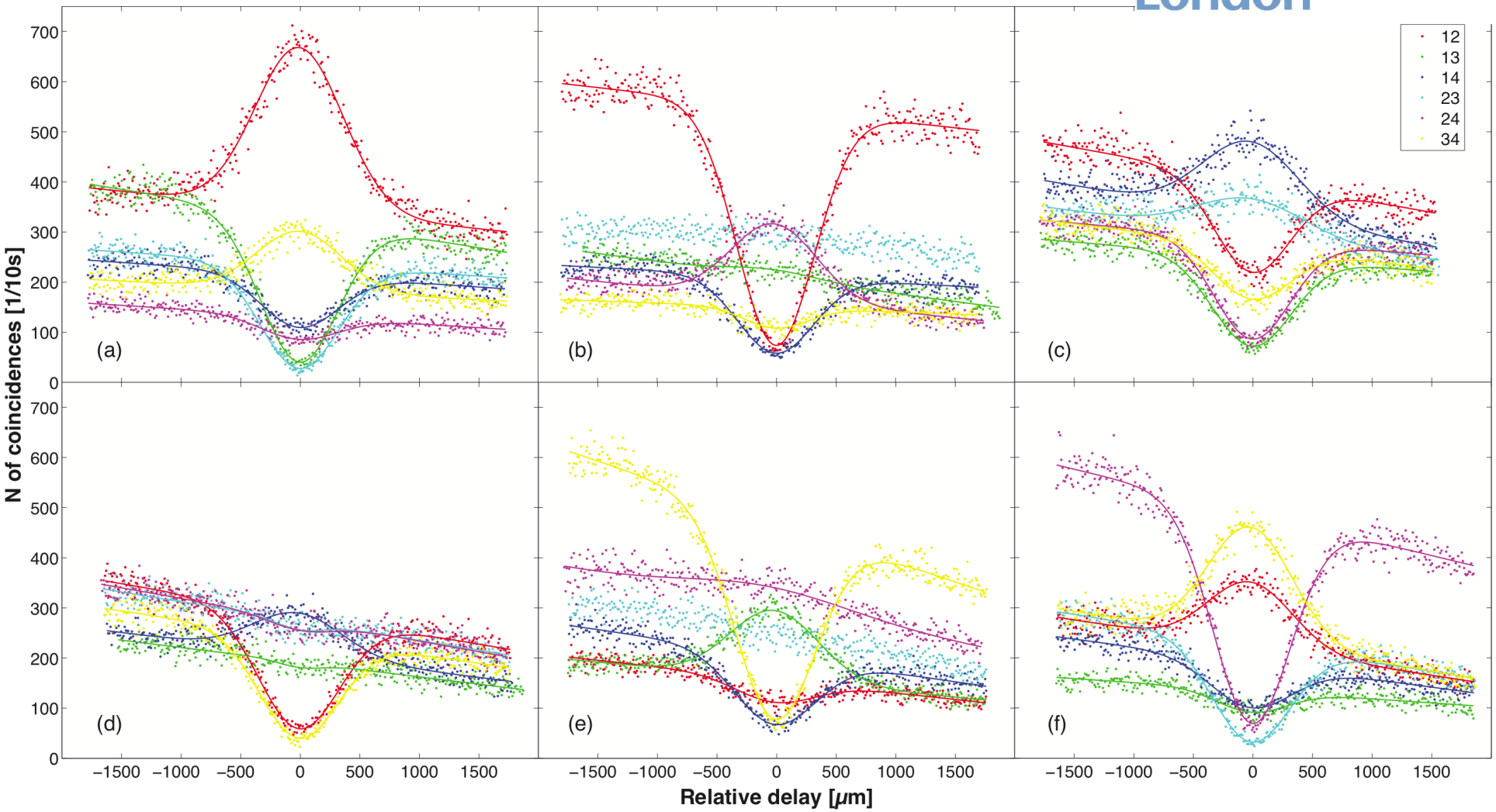

University of BRISTOL

Peruzzo, Laing, Politi, Rudolph, O'Brien
***Nature Communications* 2**, 224 (2011)

Reconstruction via visibilities

Imperial College London

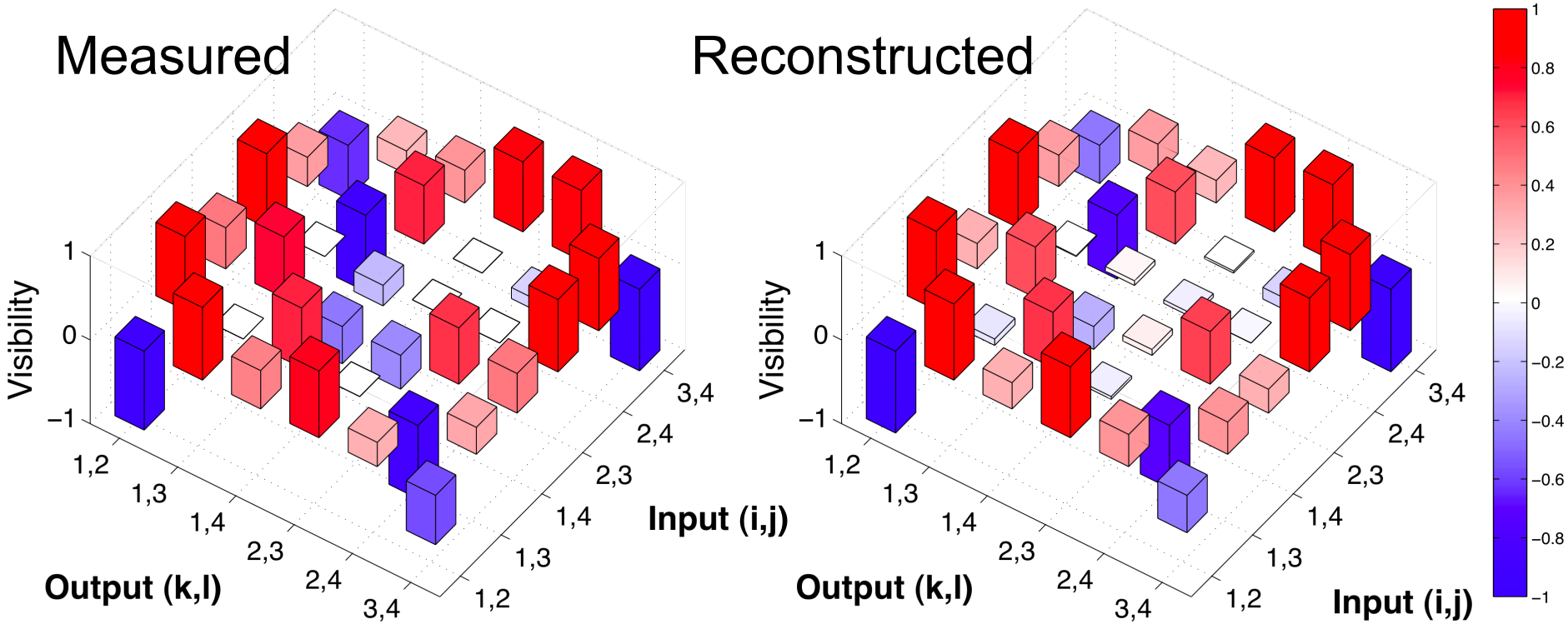

University of BRISTOL

Peruzzo, Laing, Politi, Rudolph, O'Brien
***Nature Communications* 2**, 224 (2011)

(Photonic scattering)

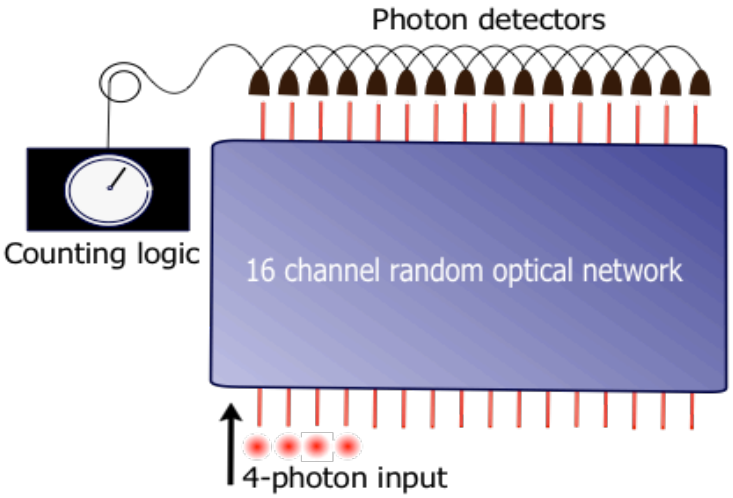

~10 photons, ~100 waveguides
~ limit of conventional computer

Scheel, arXiv:quant-ph/0406127
Bremner, Jozsa, Shepherd, Proc. Roy. Soc. **467**, 2126, (2011)
Aaronson, Arkhipov, *Proceedings of ACM STOC 2011*

Miniaturisation 2: Si integrated quantum photonics

2x2 MMI coupler

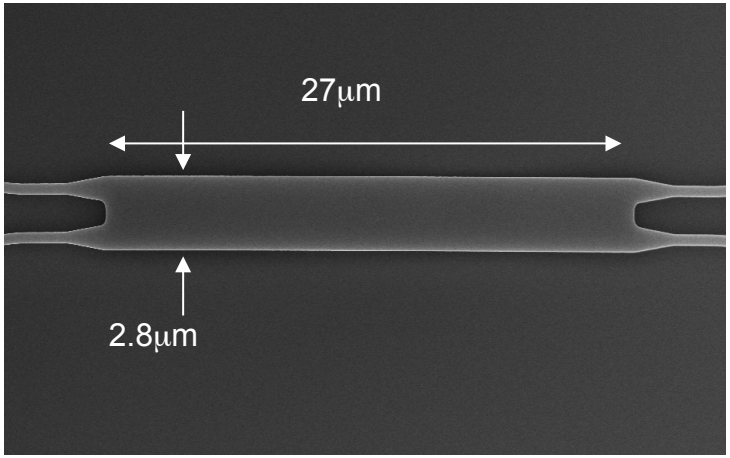

Si waveguide

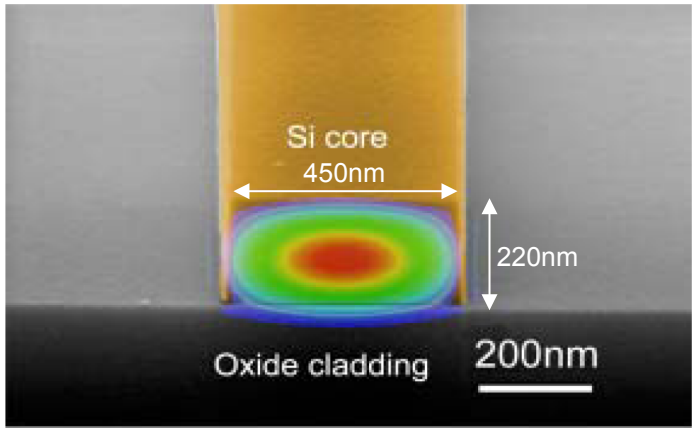

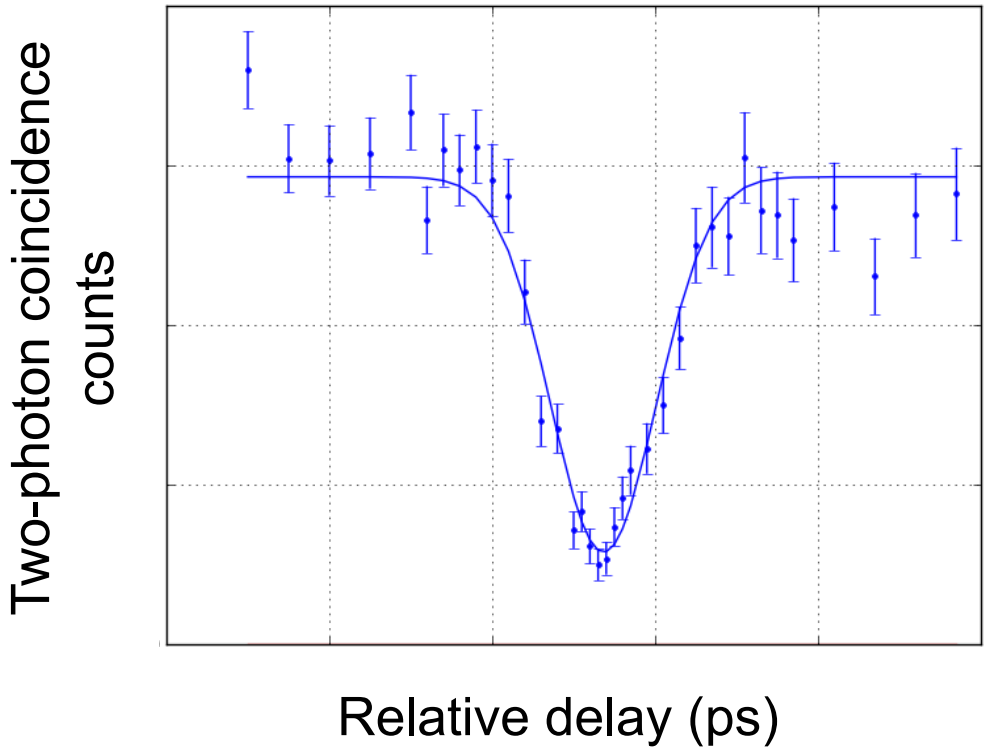

Bonneau, Engin, Ohira, Suzuki, Yoshida, Iizuka, Ezaki, Natarajan, Tanner, Hadfield, Dorenbos, Zwiller, O'Brien, Thompson,
PD1, *Group IV Photonics*, London, 16 Sep 2011

Quantum processor integrated with microelectronics

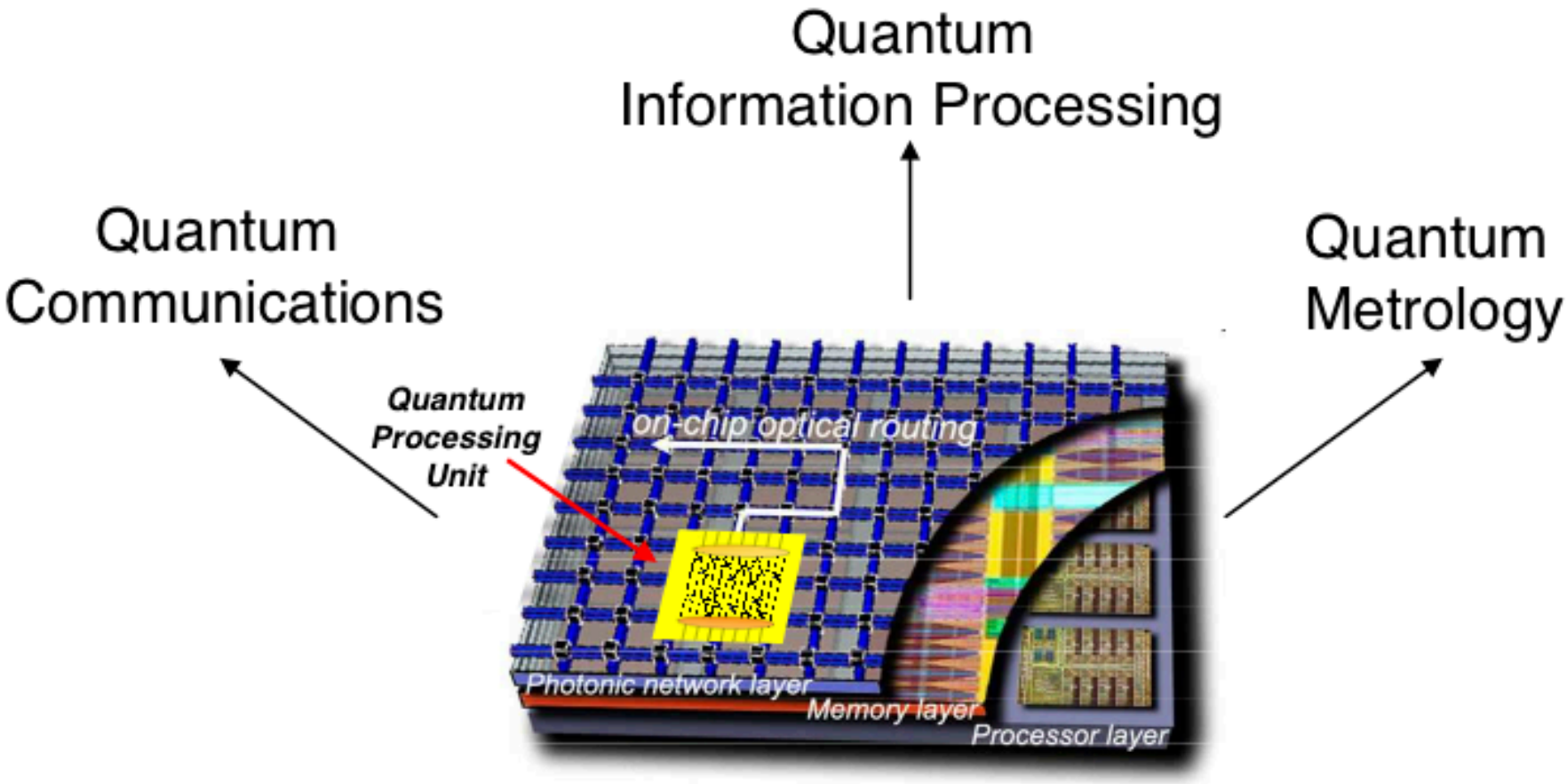

Experimental setup

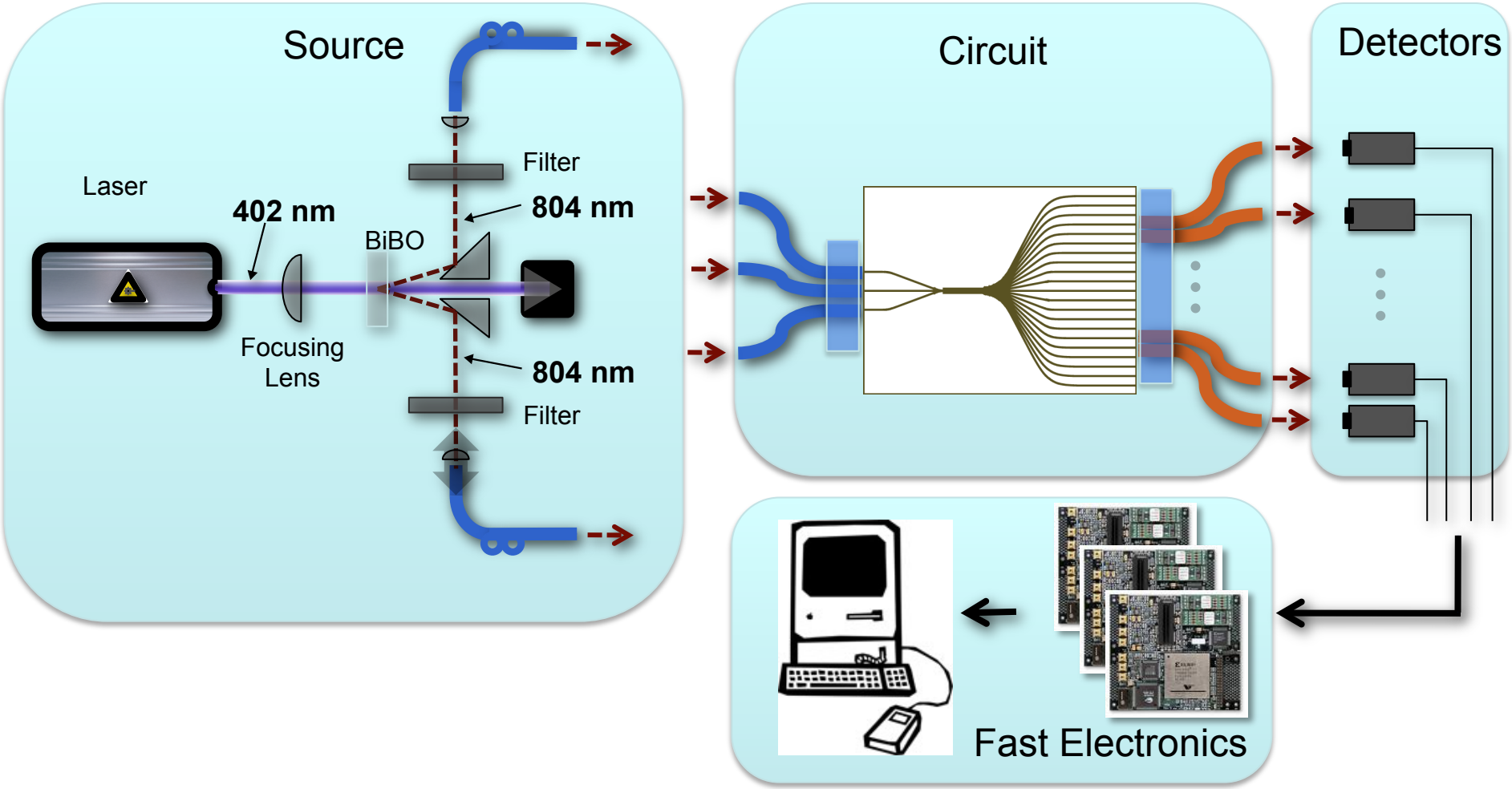

Experimental setup

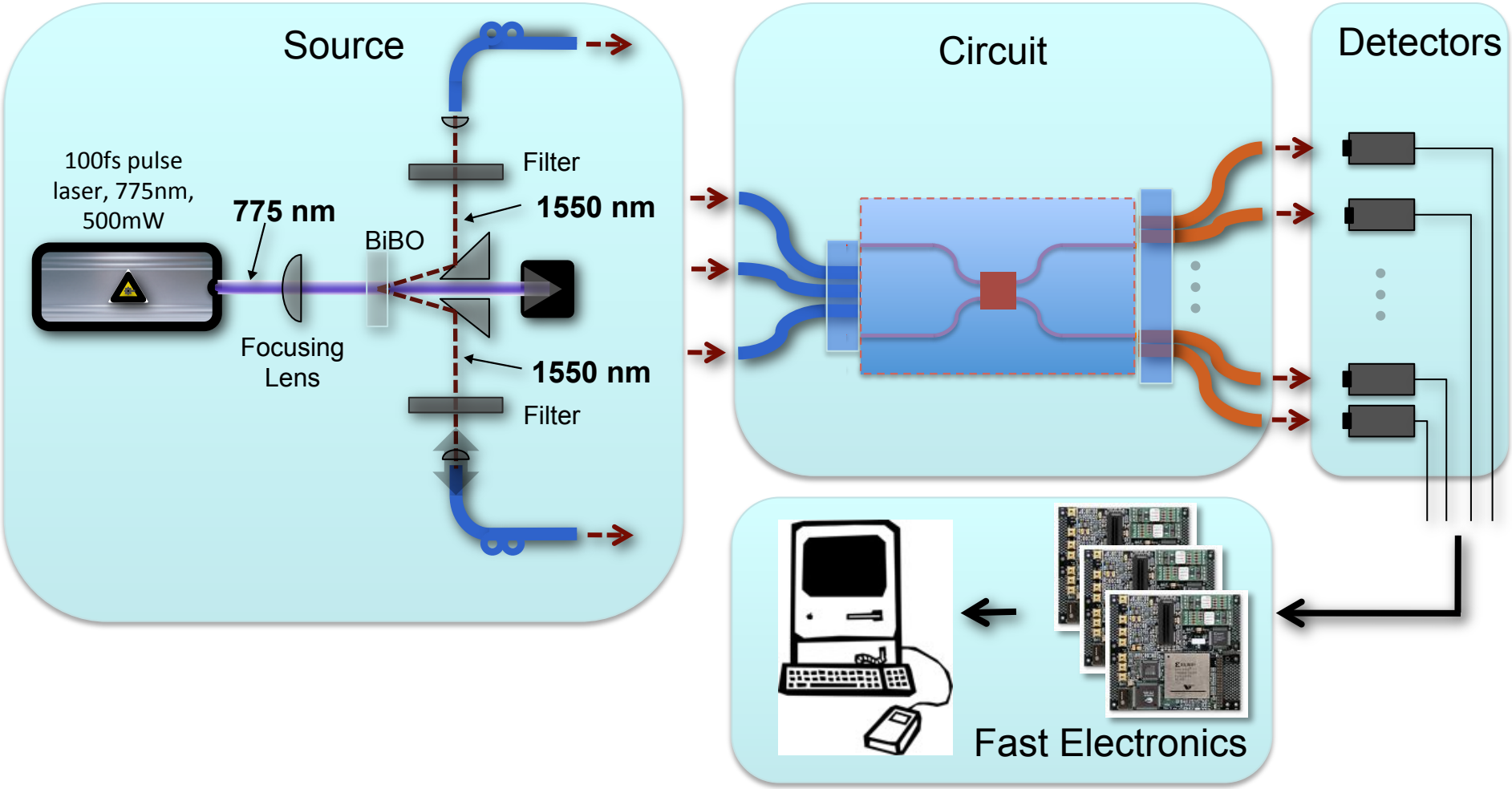

Integrated quantum photonics

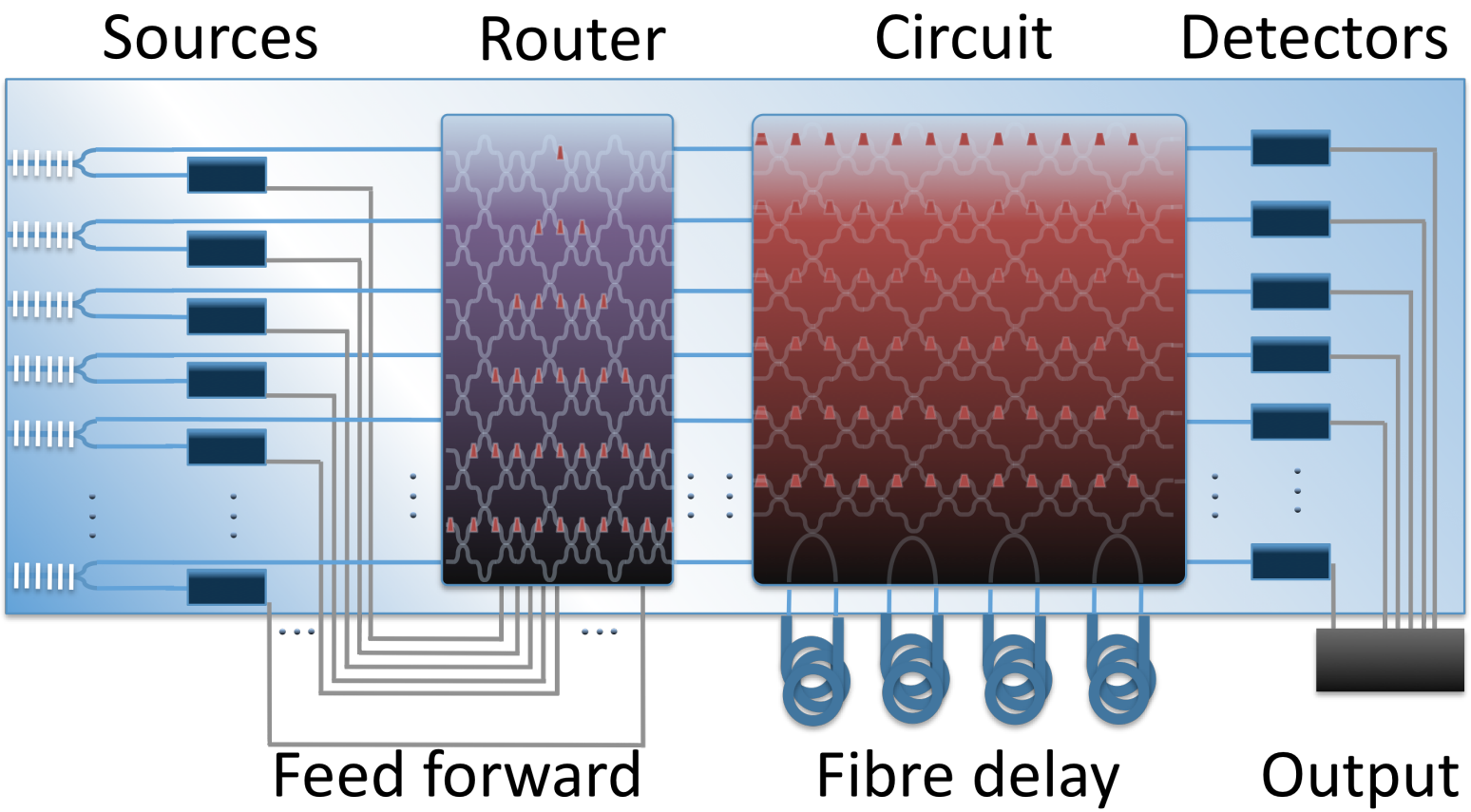

Multiplexed source

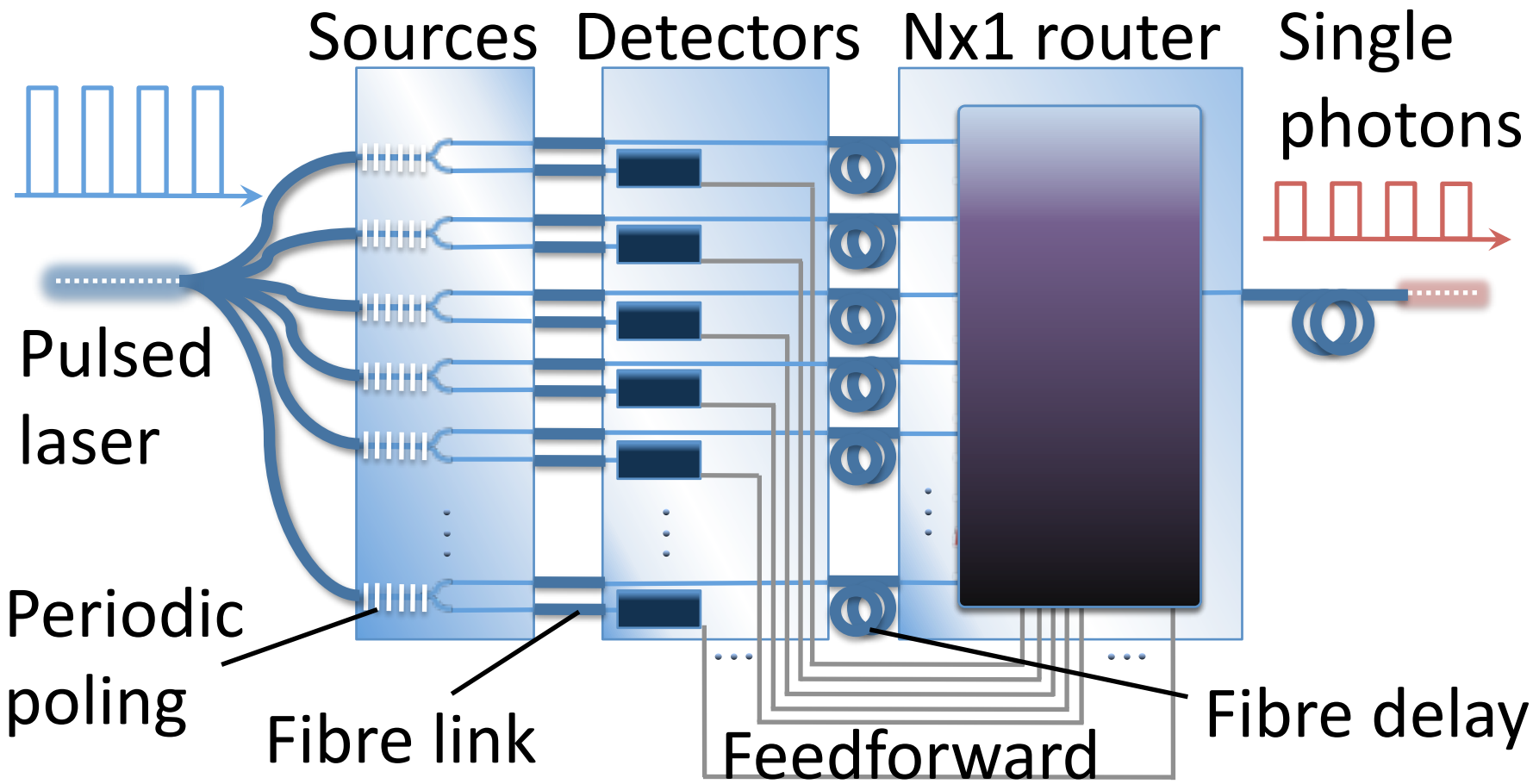

Migdall, Branning, Castelletto, ***Phys. Rev. A* 66**, 053805 (2002)

Ma, Zotter, Kofler, Jennewein, Zeilinger, ***Phys. Rev. A*** 83, 043814 (2011)

Jennewein, Barbieri, White, ***JMO* 58**, 276 (2011)

McCusker, Kwiat, ***Phys. Rev. Lett.* 103**,163602 (2009)

University of BRISTOL

Waveguide photon sources

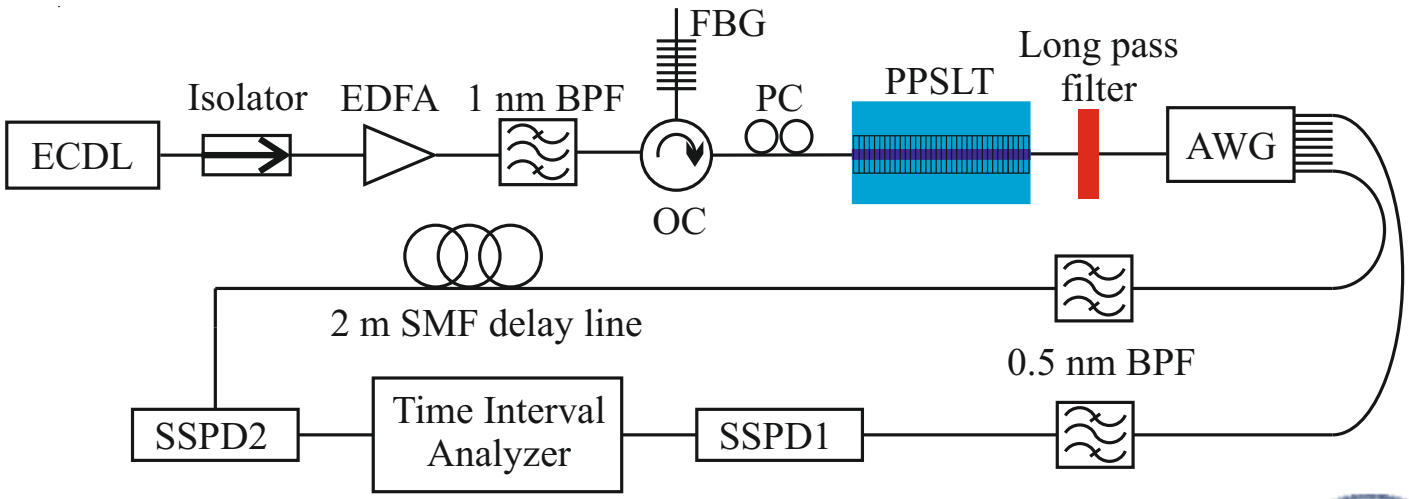

Lobino, Marshall, Xiong, Clark, Bonneau, Natarajan, Tanner, Hadfield, Dorenbos, Zijlstra, Zwiller, Marangoni, Ramponi, Thompson, Eggleton, O'Brien ***Appl. Phys. Lett.* 99**, 081110 (2011)

Xiong Marshall, Peruzzo, Lobino, Clark, Choi, Madden, Natarajan, Tanner, Hadfield, Dorenbos, Zijlstra, Zwiller, Thompson, Rarity, Steel, Luther-Davies, Eggleton, O'Brien ***Appl. Phys. Lett.* 98**, 051101 (2011)

Superconducting single photon detectors

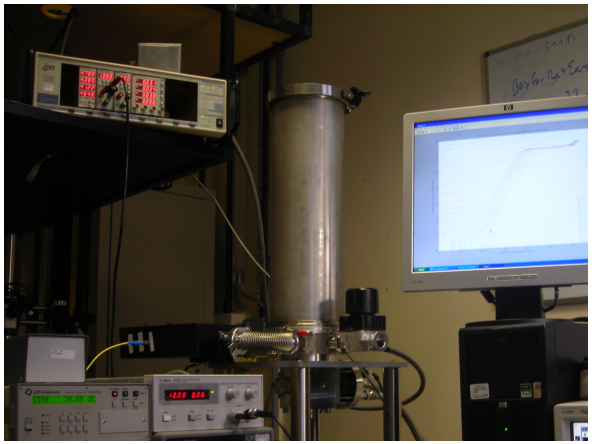

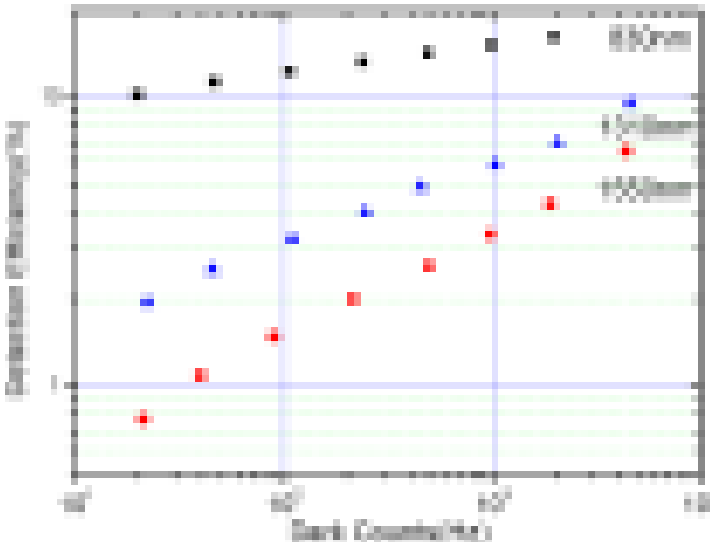

HOM:

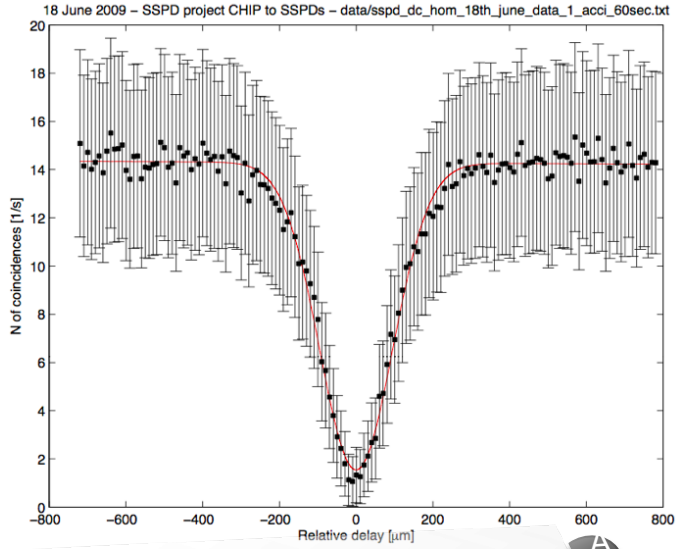

2NOON phase chip:

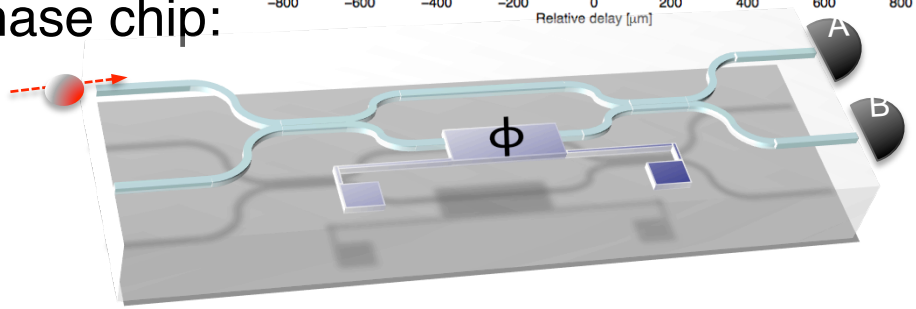

+ CNOT Chip:

Natarajan, Peruzzo, Miki, Sasaki, Wang, Baek, Nam, Hadfield O'Brien
***Appl. Phys. Lett.* 96**, 211101 (2010)

University of BRISTOL

Integrated single photon detectors

GaAs waveguide superconducting detector

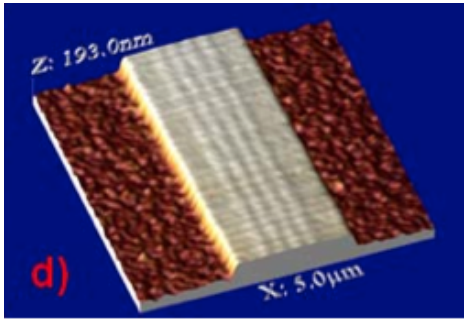

Eindhoven University of Technology , Istituto di Fotonica e Nanotecnologie, Universität Würzburg , Ecole Polytechnique Fédérale de Lausanne

A. Fiore et al., "Waveguide single-photon detectors for integrated quantum photonics," CLEO post deadline, 2011

η=20%

Silicon waveguide superconducting detector

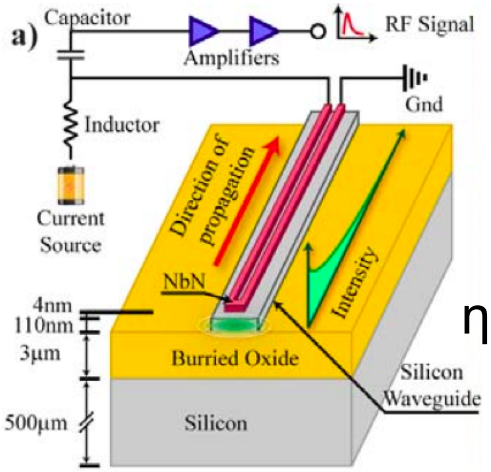

Yale University, Boston University, Moscow State Pedagogical University

W. Pernice et al., "High Speed Travelling Wave Single-Photon Detectors With Near-Unity Quantum Efficiency," arXiv.org, vol. physics.optics. 26-Aug.-2011.

η=94%

Rapidly reconfigurable quantum circuits

- 1550 nm operation
- Fast
- Manipulate path & polarisation
- Compatible with sources, detectors, memories
- => *Lithium niobate*

Fast path and polarisation manipulation of telecom wavelength photons

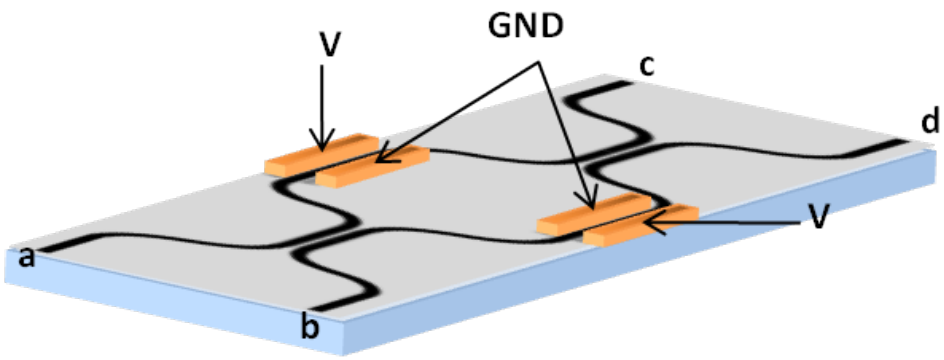

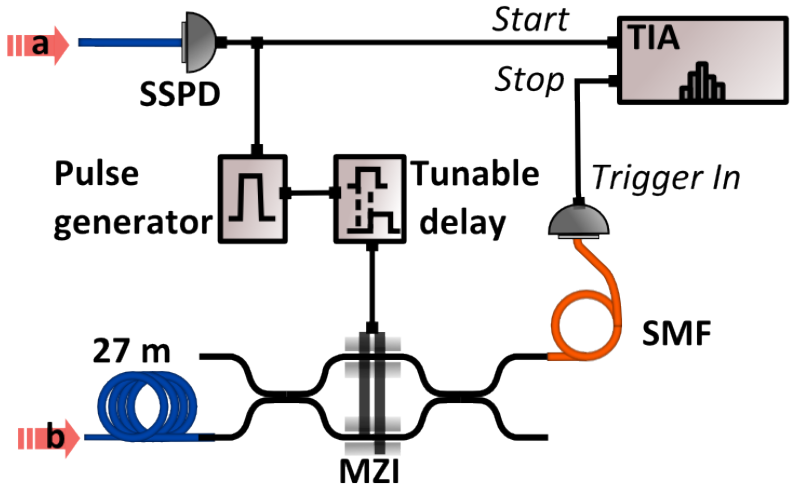

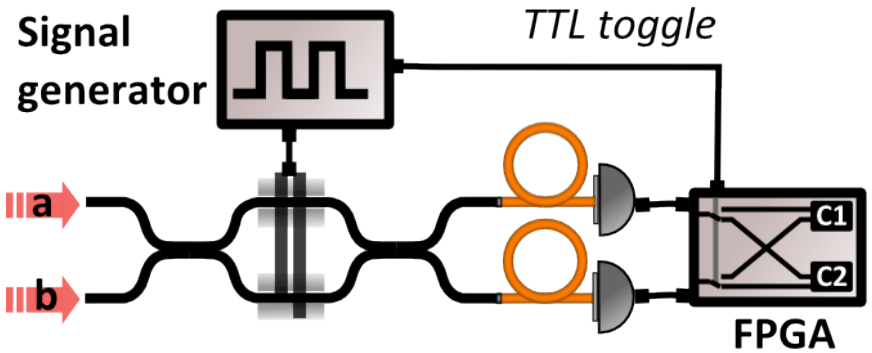

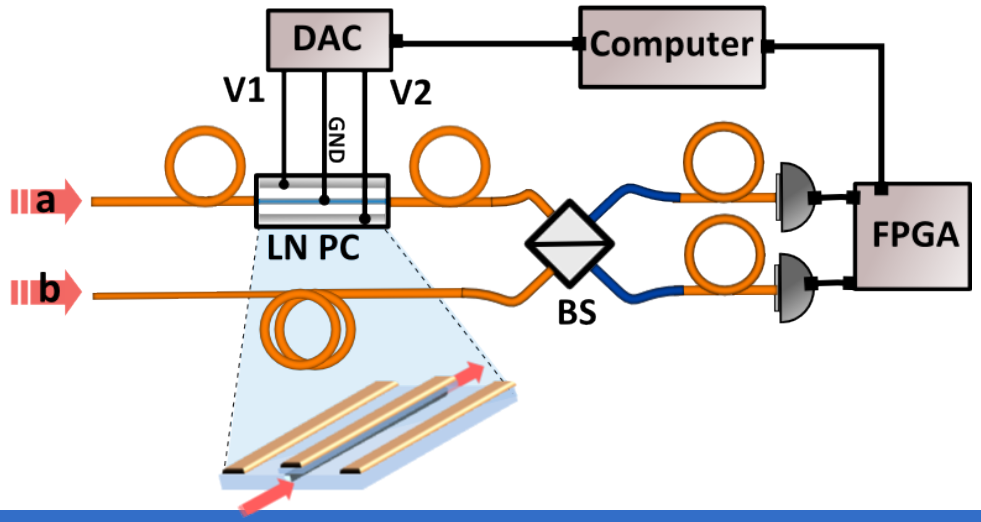

University of BRISTOL

Bonneau, Lobino, Jiang, Natarajan, Tanner, Hadfield, Dorenbos, Zwiller, Thompson, O'Brien ***PRL*** (2012)

Enhanced emission from NVs in diamond

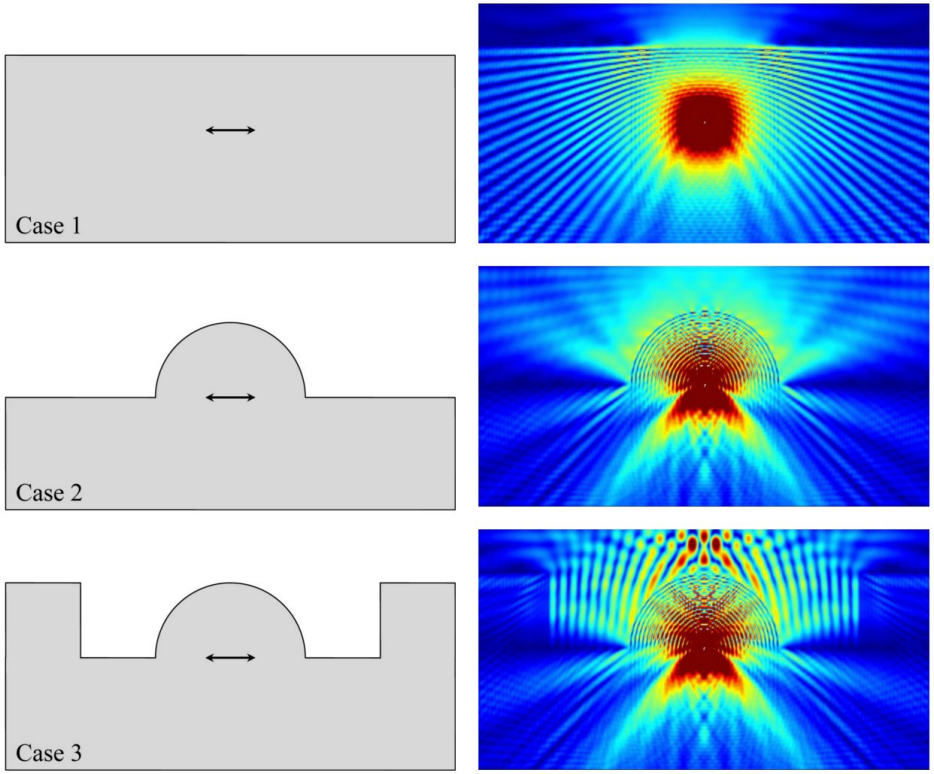

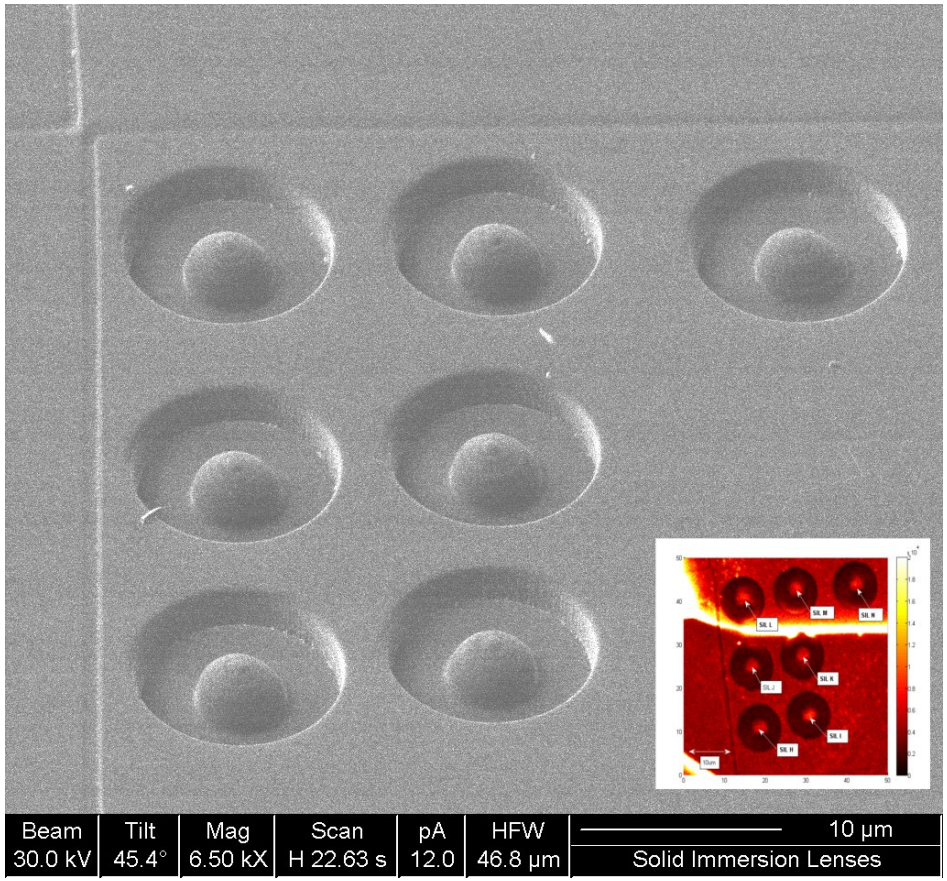

Marseglia, Hadden, Stanley-Clark, Harrison, Patton, Ho, Naydenov, Jelezko, Meijer, Dolan, Smith, Rarity, O'Brien
***Appl. Phys. Lett.* 98** 133107 (2011)

Hadden, Harrison, Stanley-Clarke, Marseglia, Ho, Patton, O'Brien, Rarity
***Appl. Phys. Lett.* 97** 241901 (2010)

Outlook

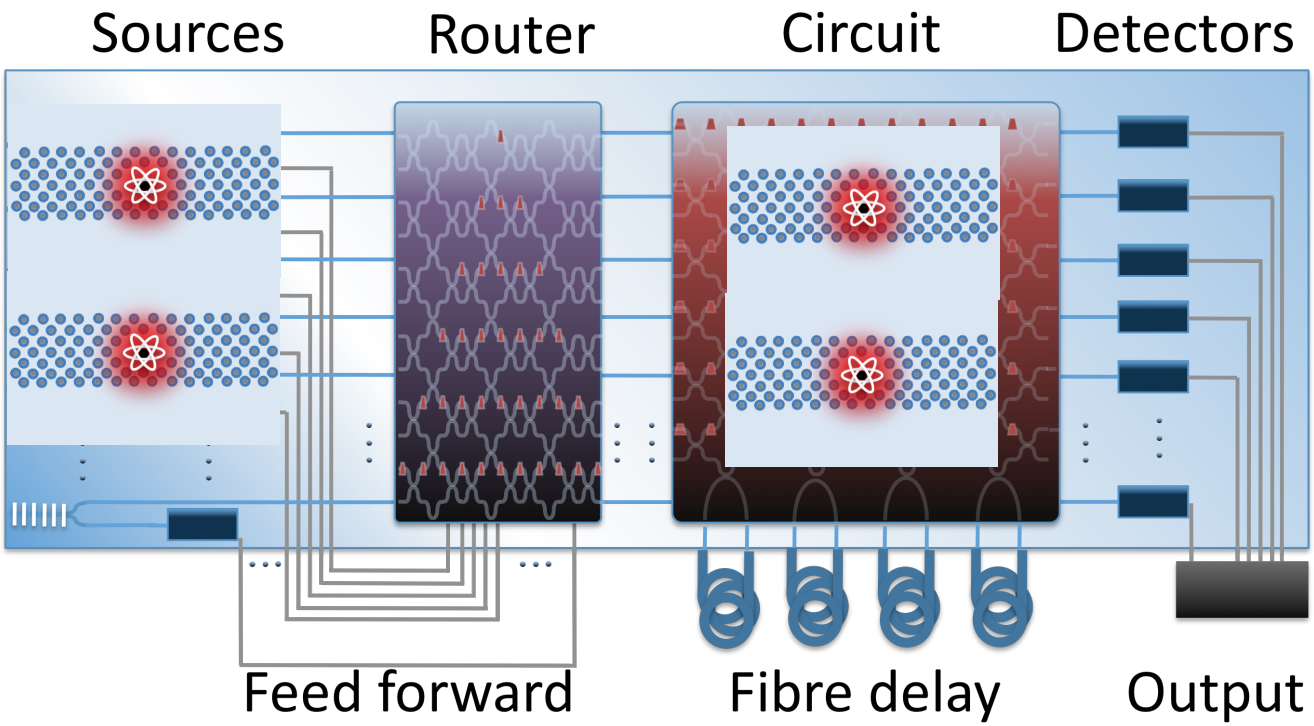
Sources
Router
Circuit
Detectors
Feed forward
Fibre delay
Output

1550 nm pair photon source

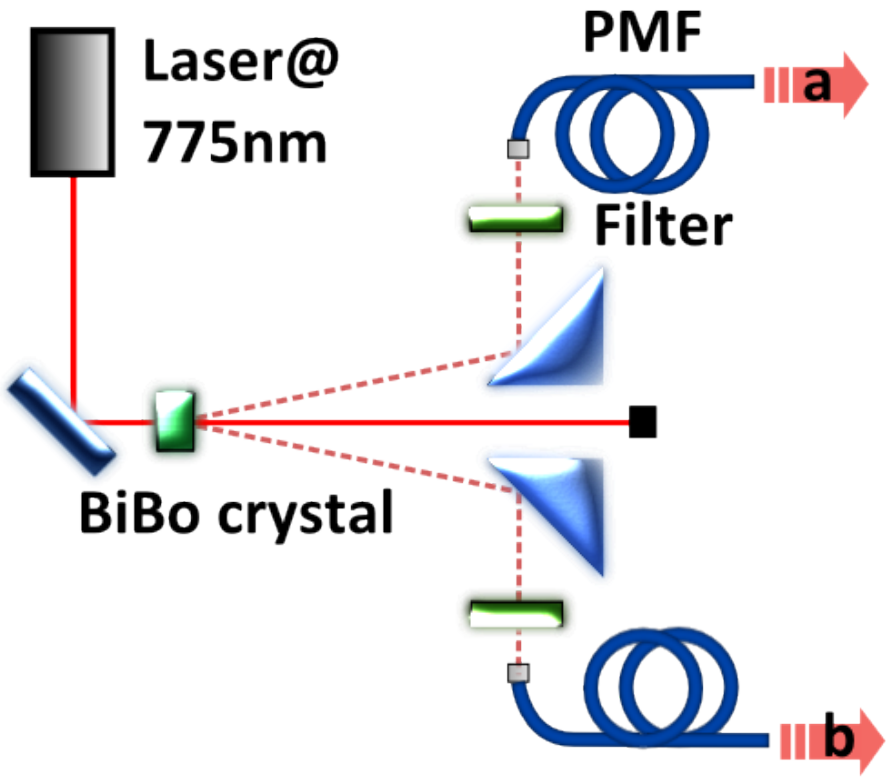

Bonneau, Lobino, Jiang, Natarajan, Tanner, Hadfield, Dorenbos, Zwiller, Thompson, O'Brien ***arXiv***:1107.3476

Heralded single photon state preparation

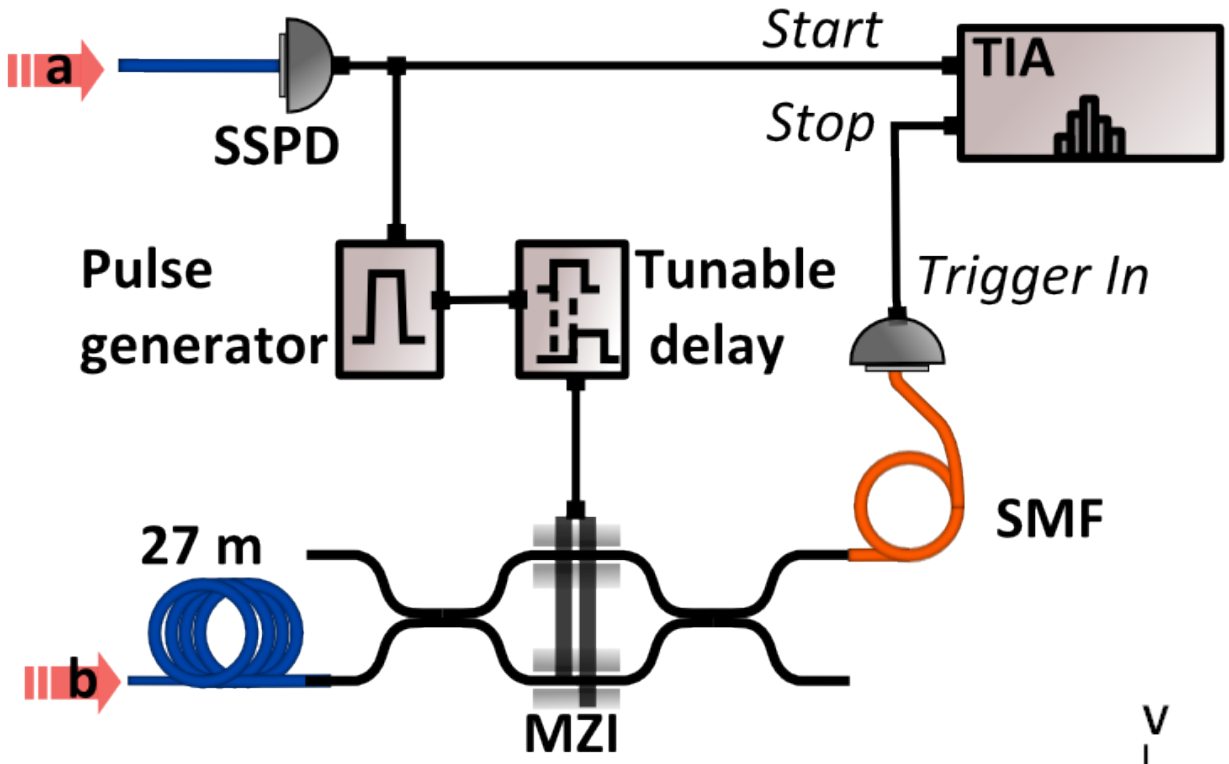

$$\theta \propto V$$

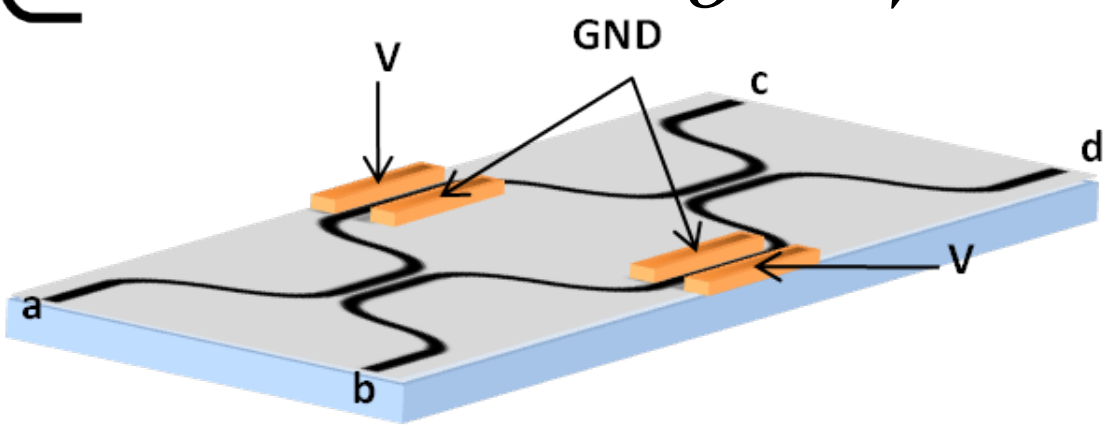

$$|10\rangle \rightarrow \cos\left(\frac{\theta}{2}\right)|10\rangle + \sin\left(\frac{\theta}{2}\right)|01\rangle$$

Bonneau, Lobino, Jiang, Natarajan, Tanner, Hadfield, Dorenbos, Zwiller, Thompson, O'Brien ***arXiv***:1107.3476

Heralded single photon state preparation

MZI driven with a 4 ns rising time pulse

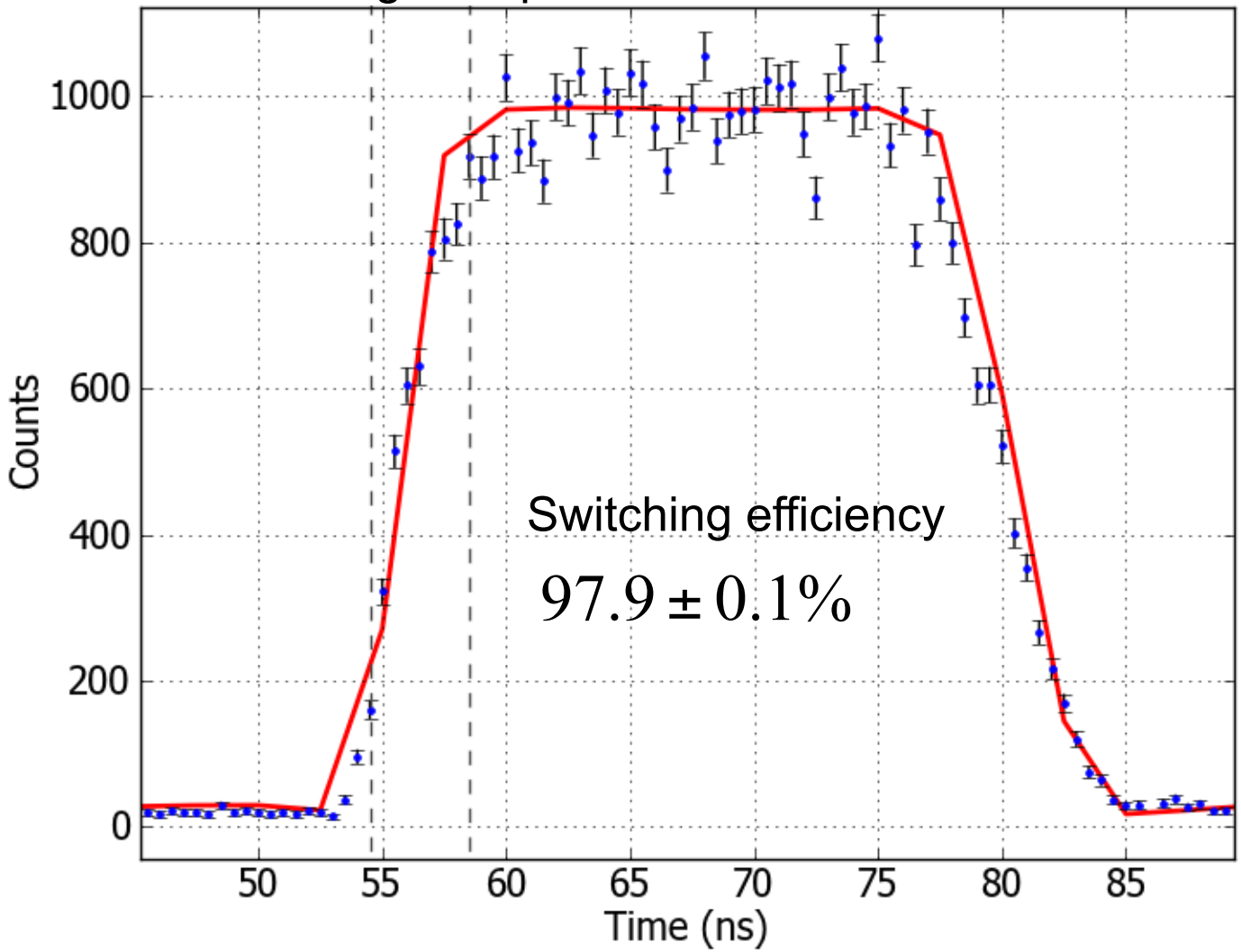

University of BRISTOL

Bonneau, Lobino, Jiang, Natarajan, Tanner, Hadfield, Dorenbos, Zwiller, Thompson, O'Brien ***arXiv***:1107.3476

Fast switching of two-photon state

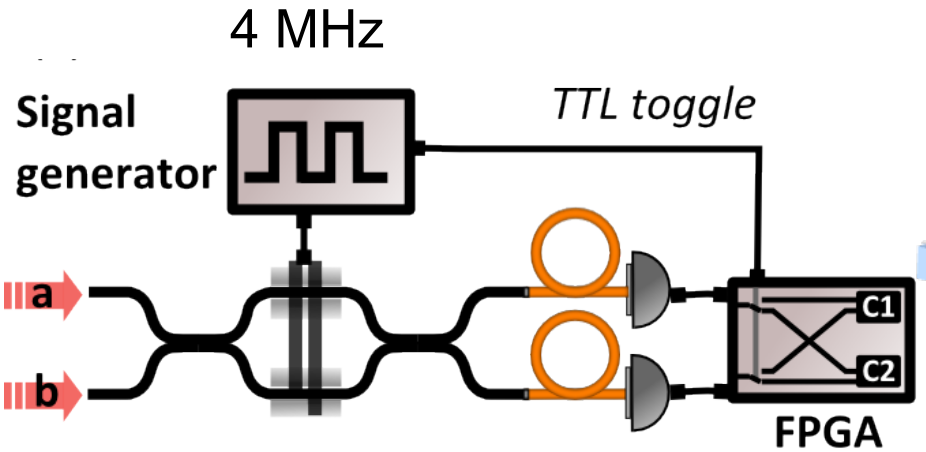

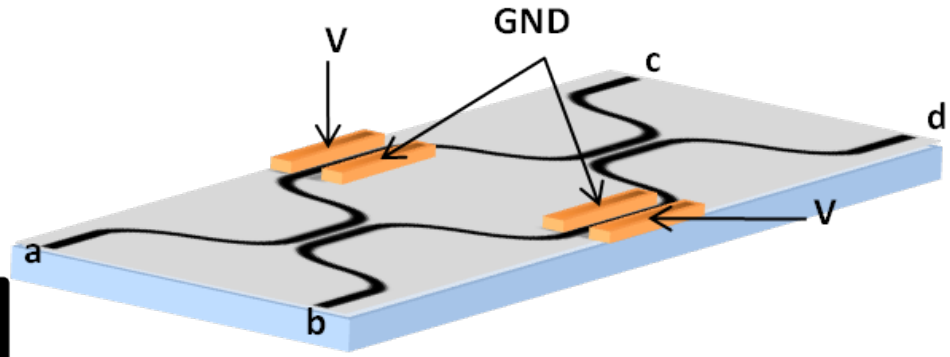

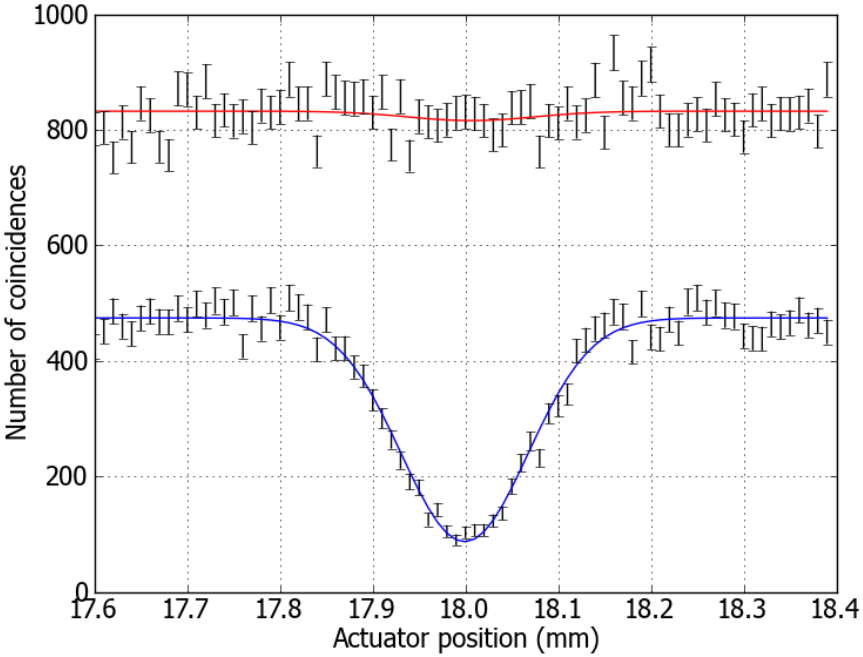

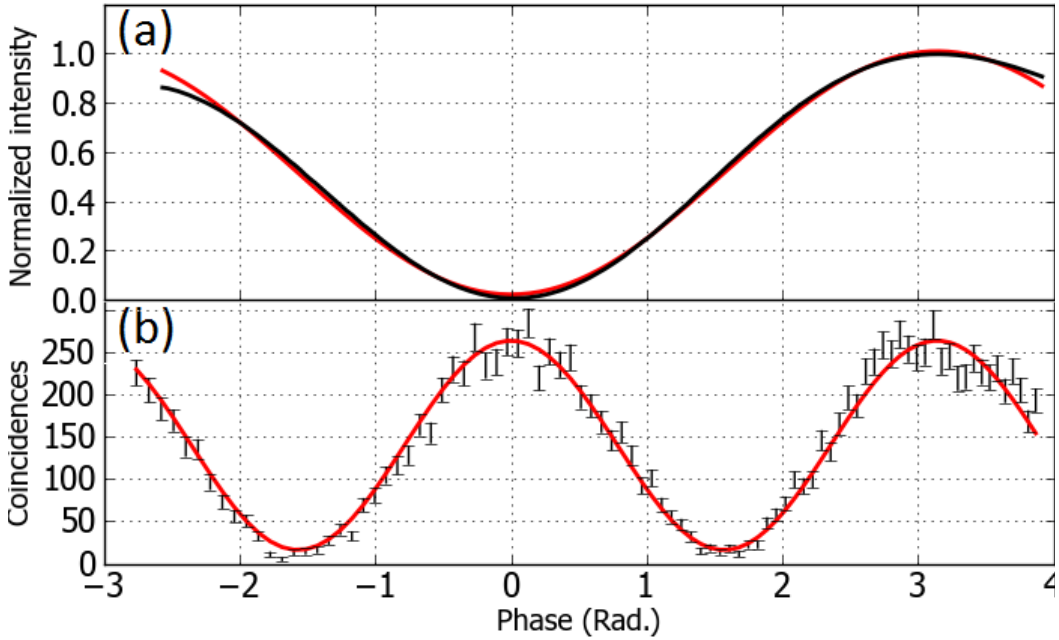

University of BRISTOL

Bonneau, Lobino, Jiang, Natarajan, Tanner, Hadfield, Dorenbos, Zwiller, Thompson, O'Brien ***arXiv***:1107.3476

Polarisation control

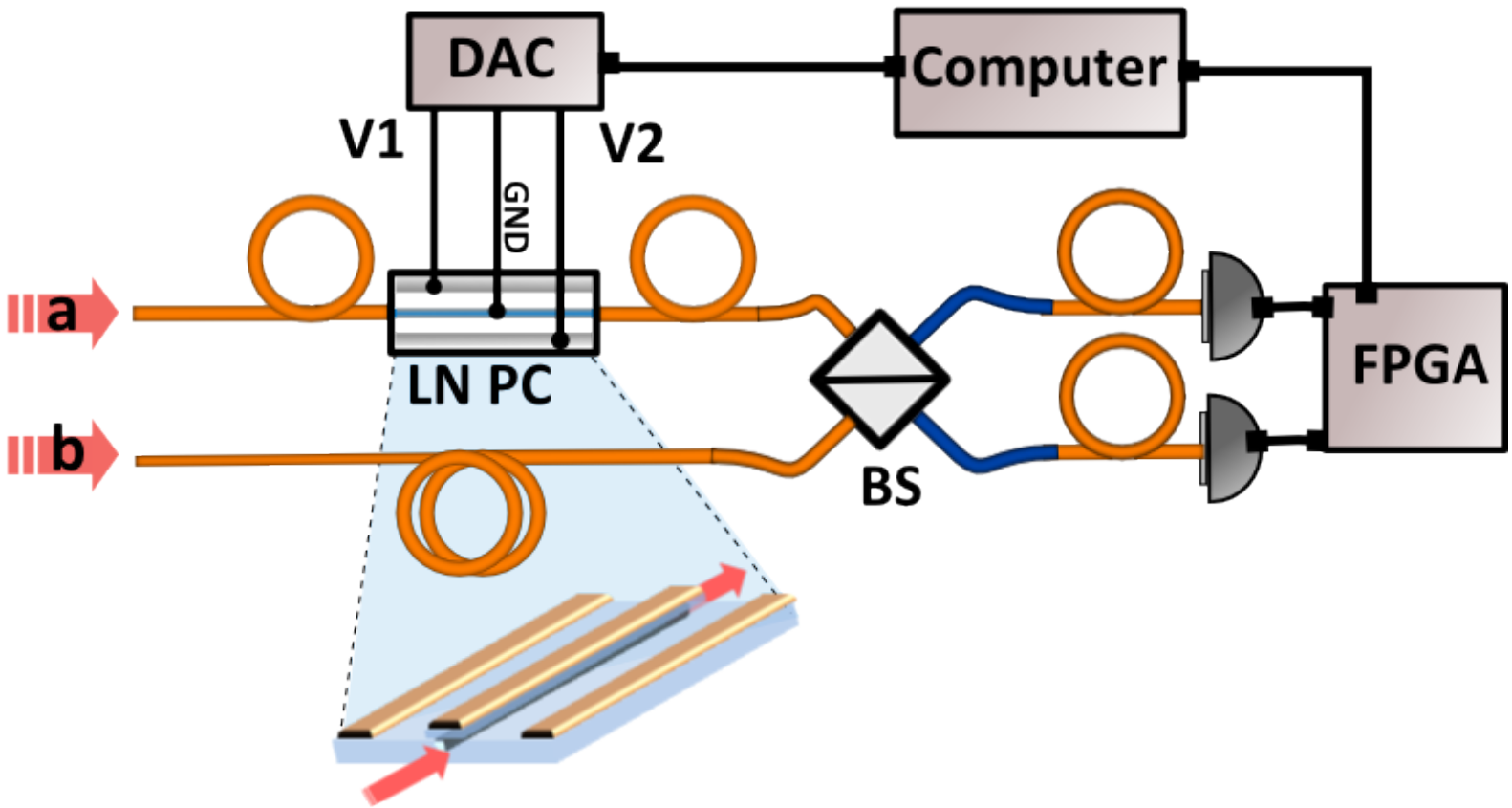

Bonneau, Lobino, Jiang, Natarajan, Tanner, Hadfield, Dorenbos, Zwiller, Thompson, O'Brien ***arXiv***:1107.3476

Polarisation control

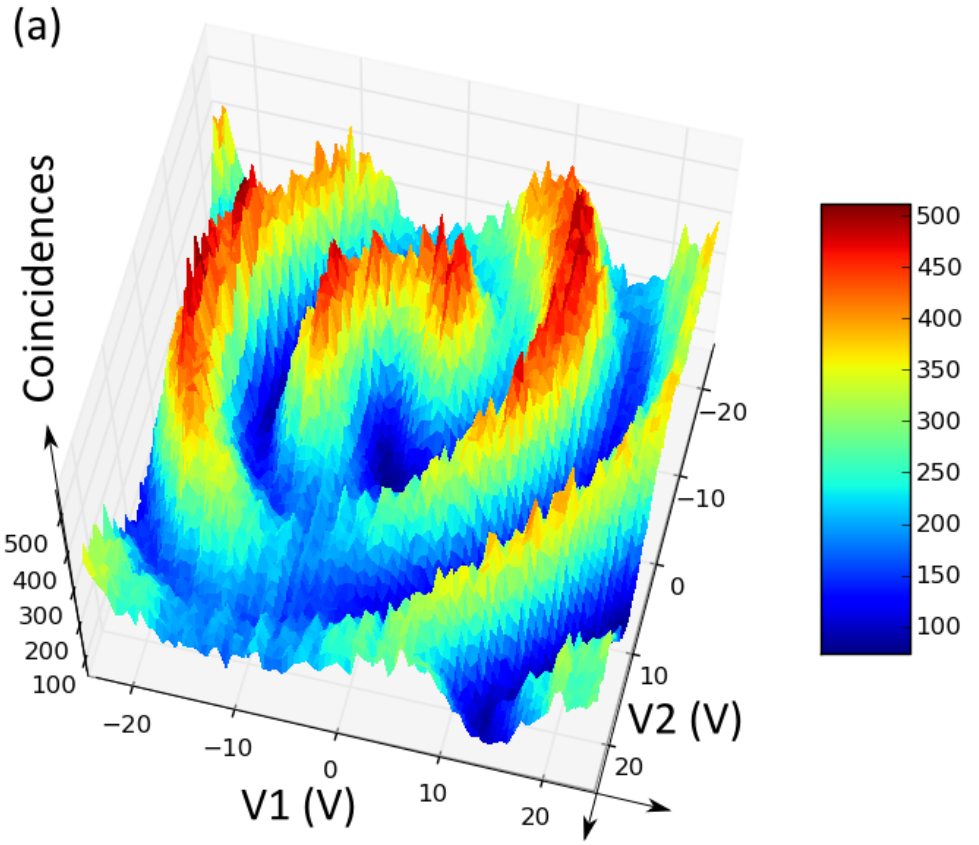

Bonneau, Lobino, Jiang, Natarajan, Tanner, Hadfield, Dorenbos, Zwiller, Thompson, O'Brien ***arXiv***:1107.3476

Polarisation control

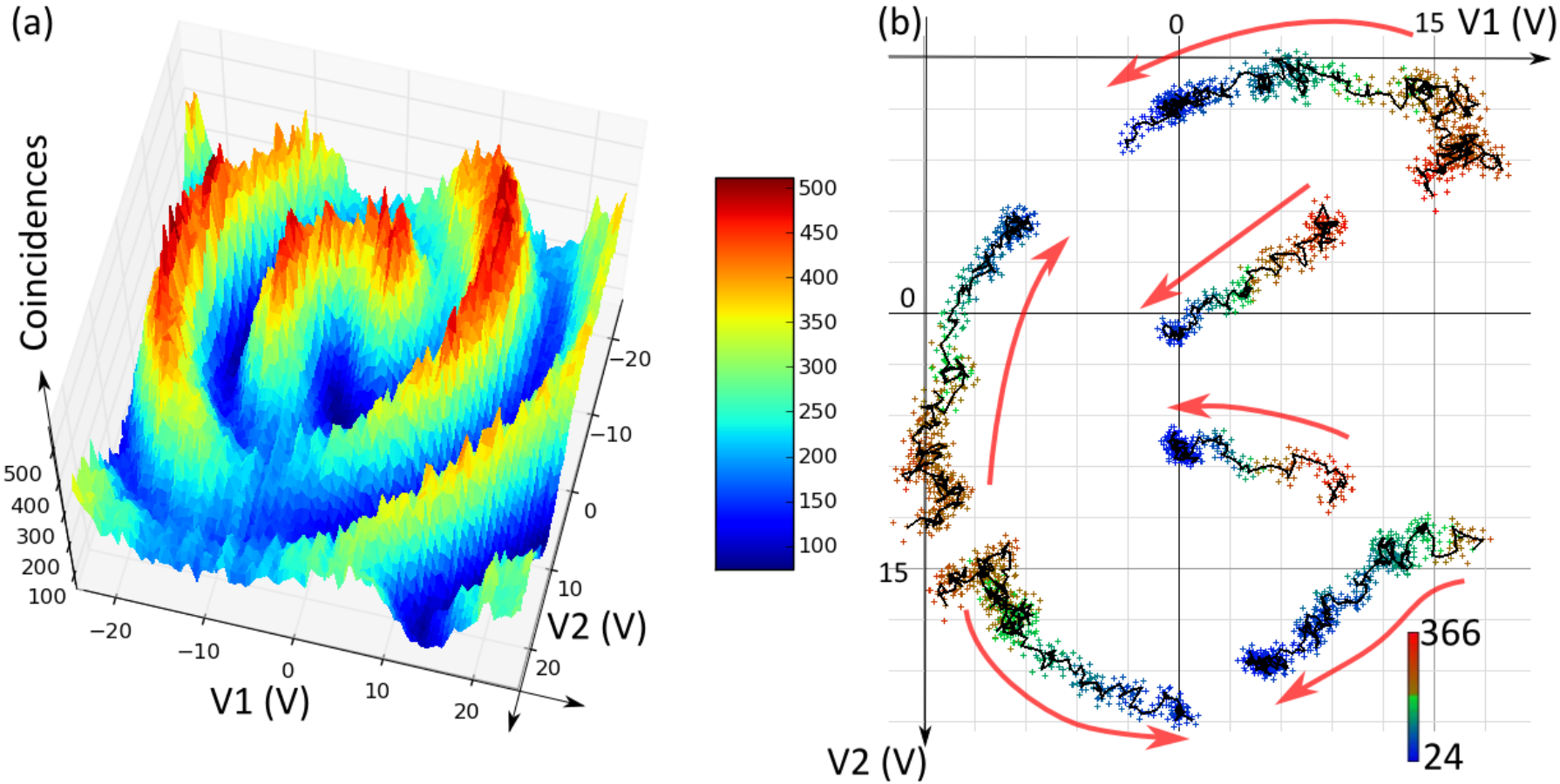

University of BRISTOL

Bonneau, Lobino, Jiang, Natarajan, Tanner, Hadfield, Dorenbos, Zwiller, Thompson, O'Brien ***arXiv***:1107.3476

Polarisation control

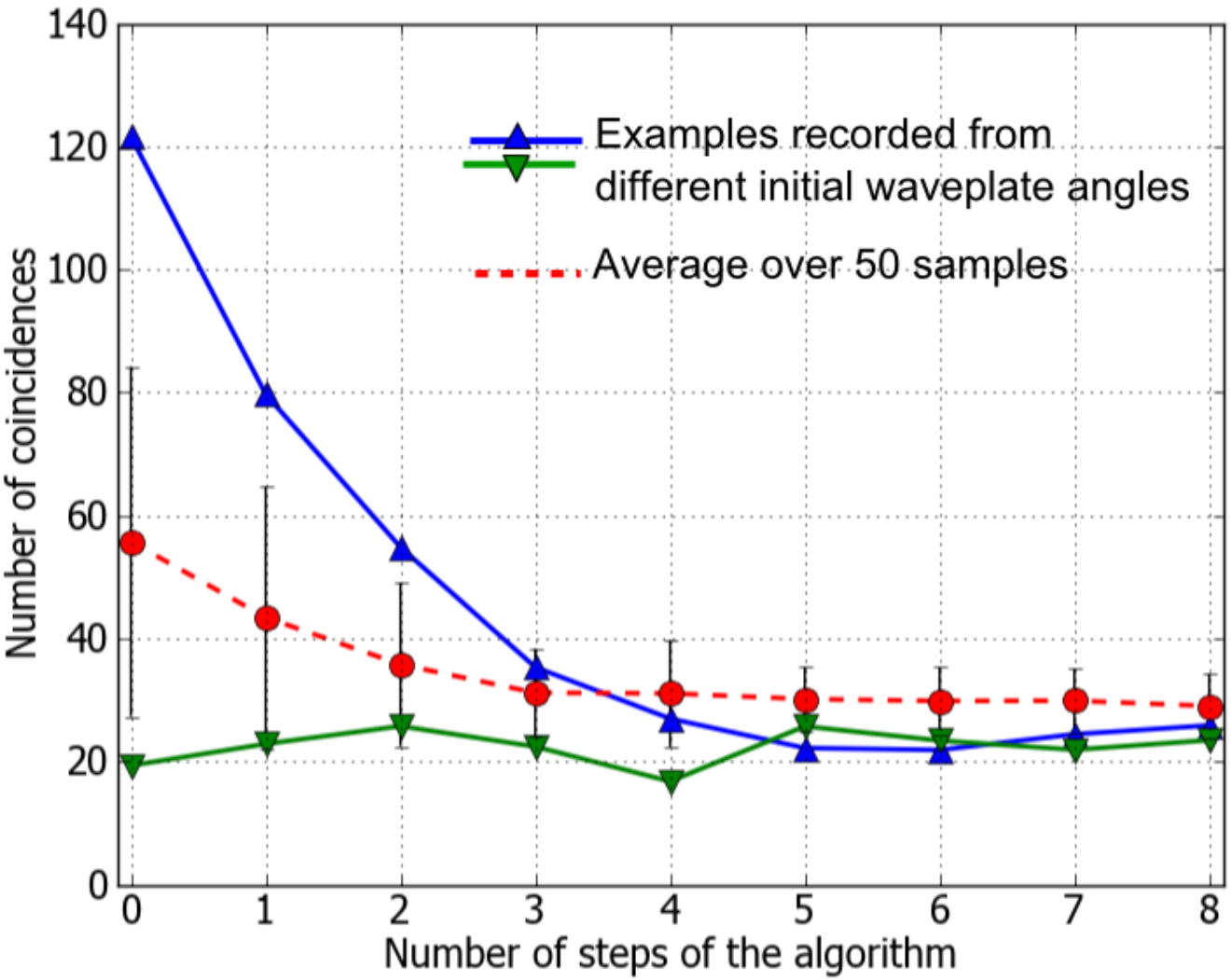

University of BRISTOL

Bonneau, Lobino, Jiang, Natarajan, Tanner, Hadfield, Dorenbos, Zwiller, Thompson, O'Brien ***arXiv***:1107.3476

Enhanced emission from NVs in diamond

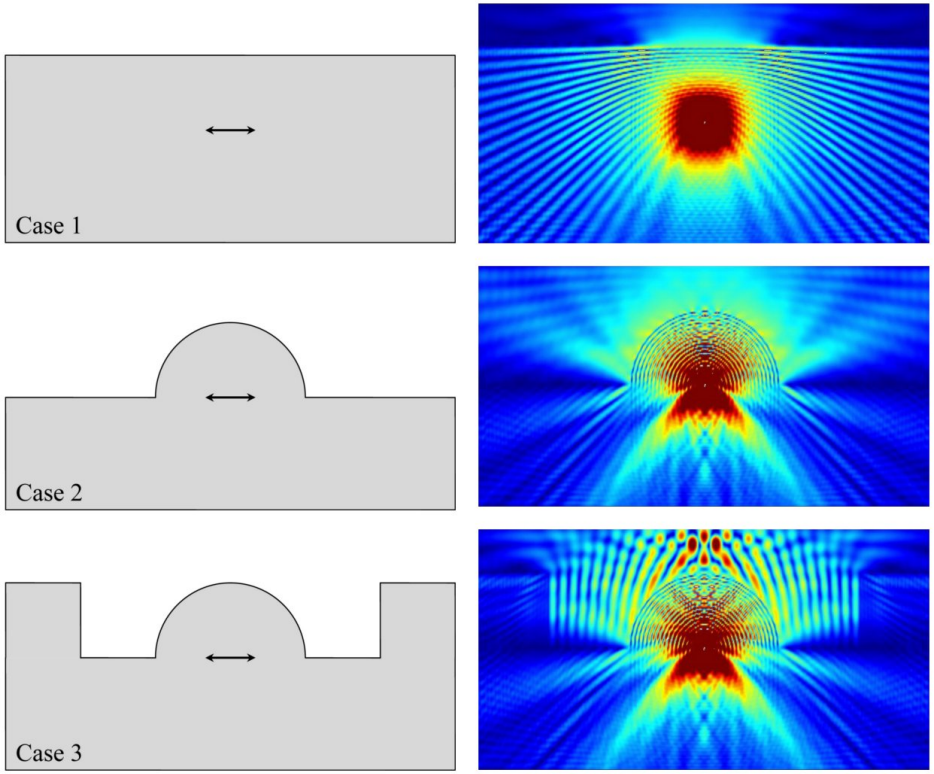

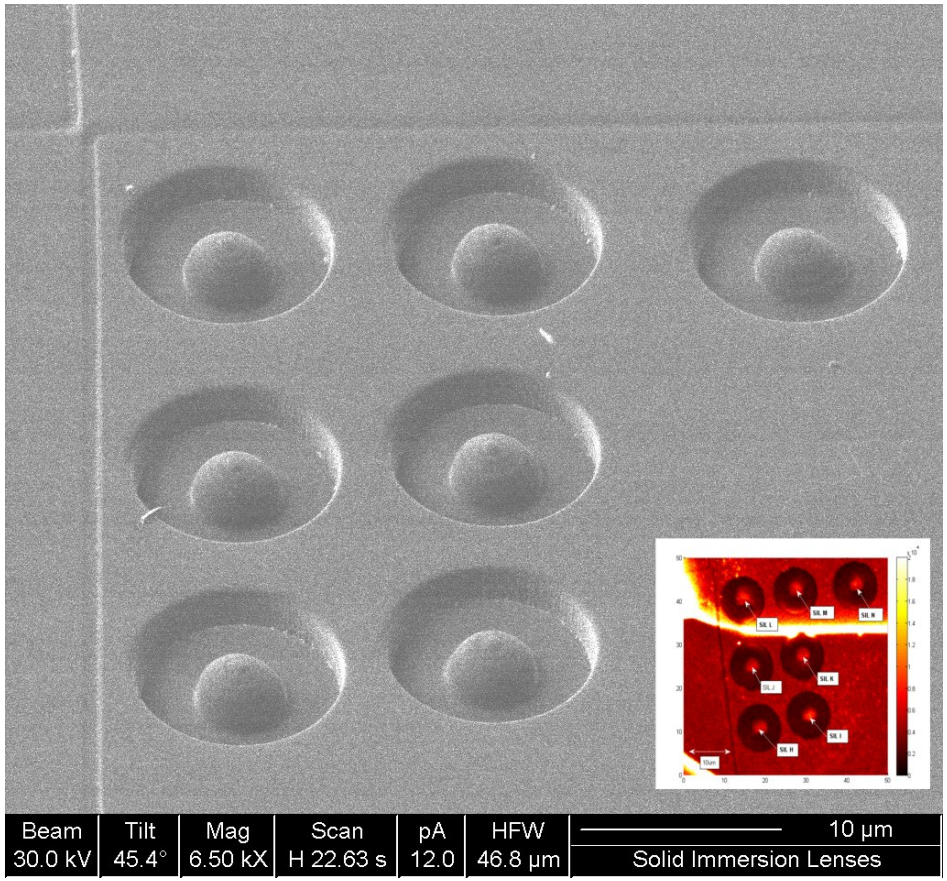

Marseglia, Hadden, Stanley-Clark, Harrison, Patton, Ho, Naydenov, Jelezko, Meijer, Dolan, Smith, Rarity, O'Brien
***Appl. Phys. Lett.* 98** 133107 (2011)

Hadden, Harrison, Stanley-Clarke, Marseglia, Ho, Patton, O'Brien, Rarity
***Appl. Phys. Lett.* 97** 241901 (2010)

Outlook

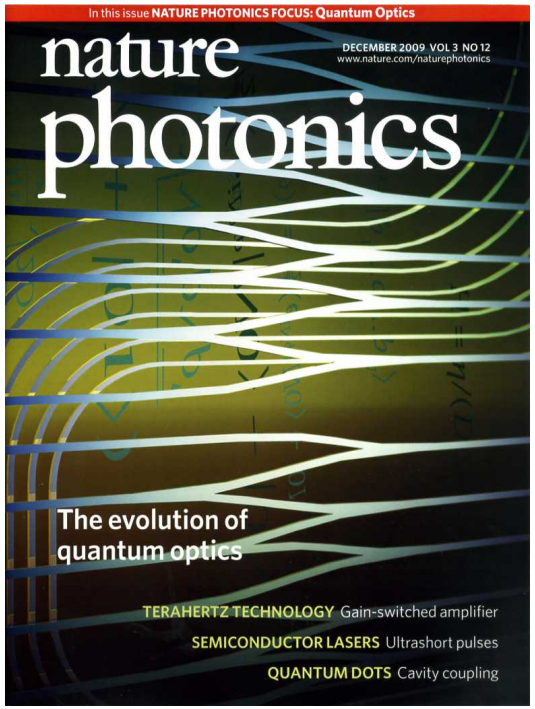
In this issue NATURE PHOTONICS FOCUS: Quantum Optics
nature photonics
DECEMBER 2009 VOL 3 NO 12
www.nature.com/naturephotonics
The evolution of quantum optics
TERAHERTZ TECHNOLOGY Gain-switched amplifier
SEMICONDUCTOR LASERS Ultrashort pulses
QUANTUM DOTS Cavity coupling

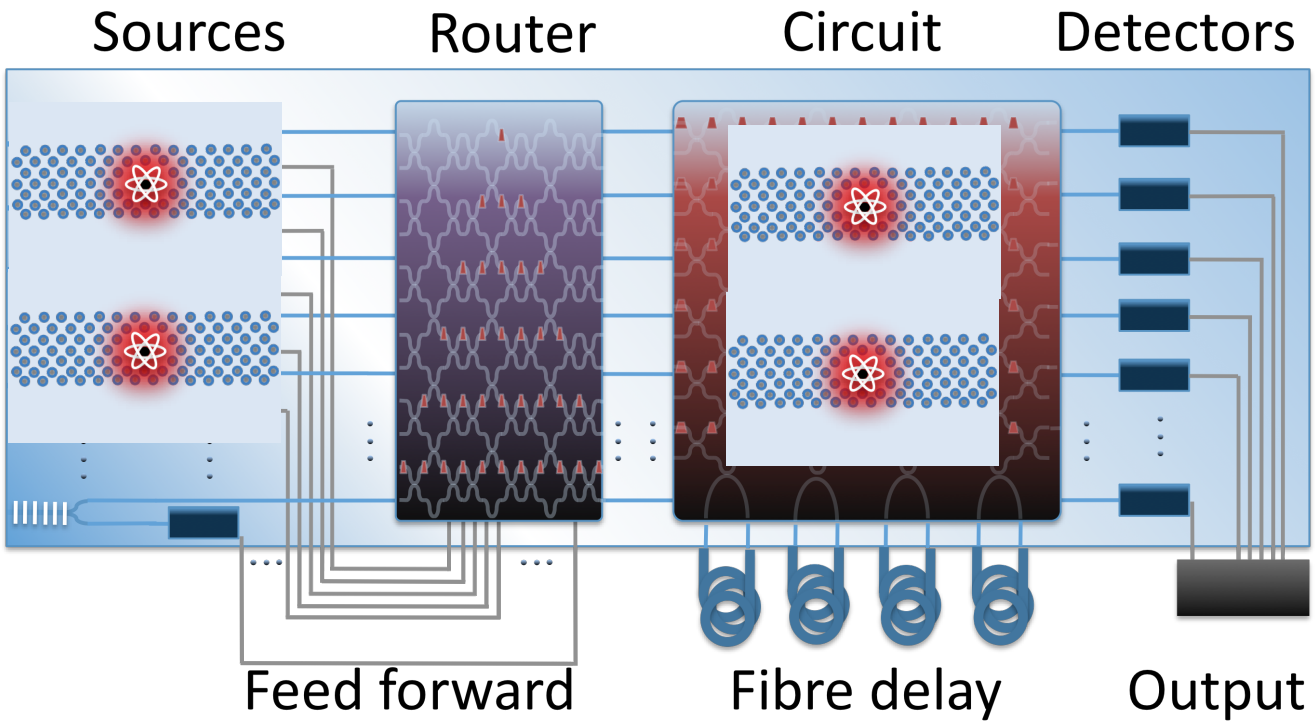
Sources
Router
Circuit
Detectors
Feed forward
Fibre delay
Output

Non-Classical Interference

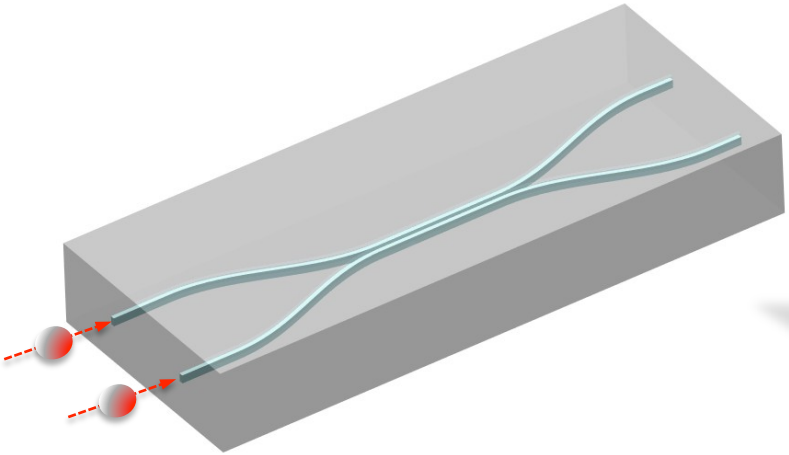

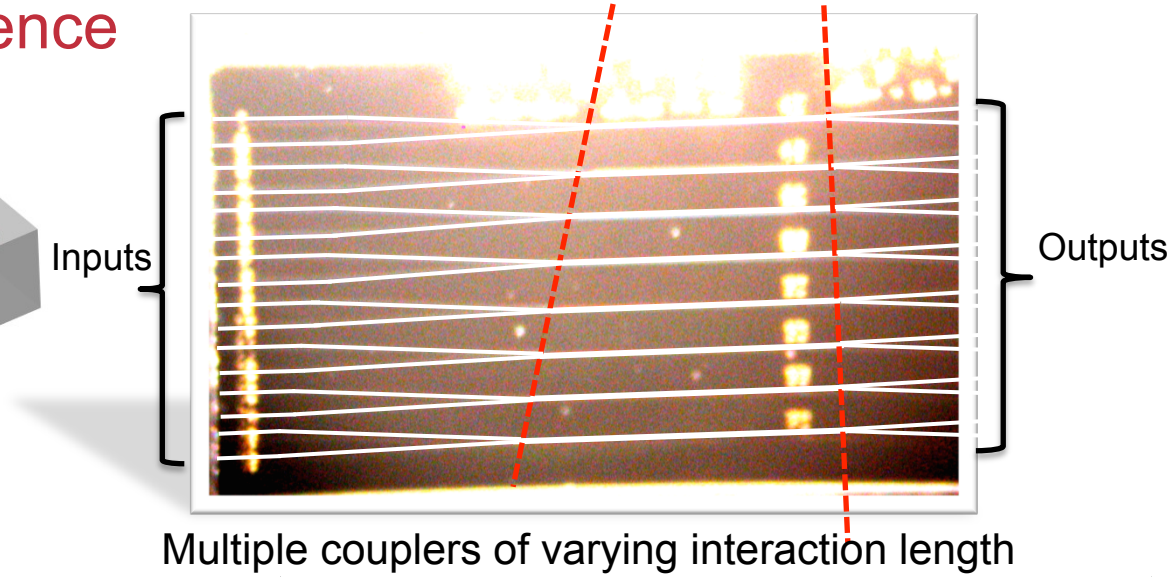

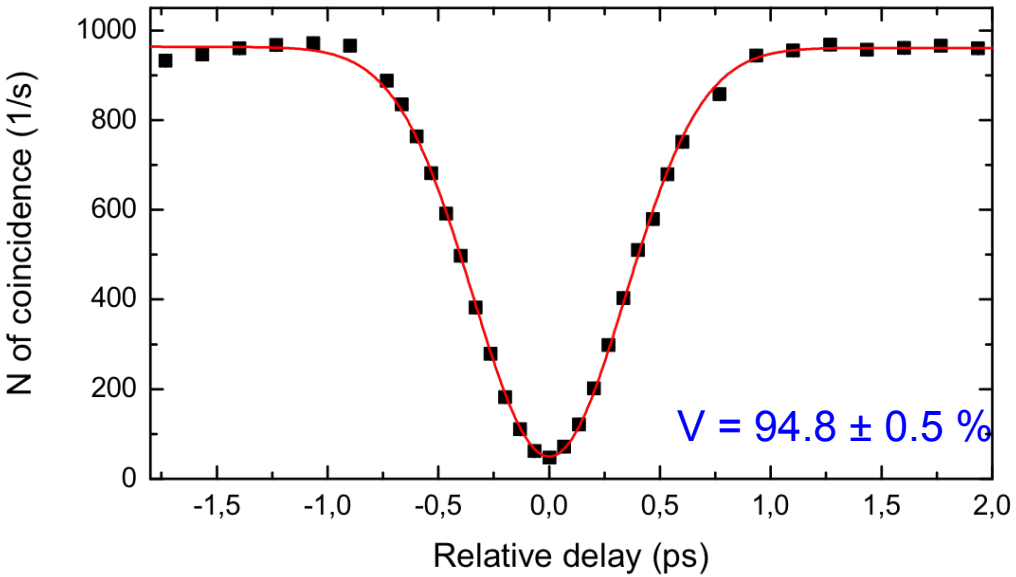

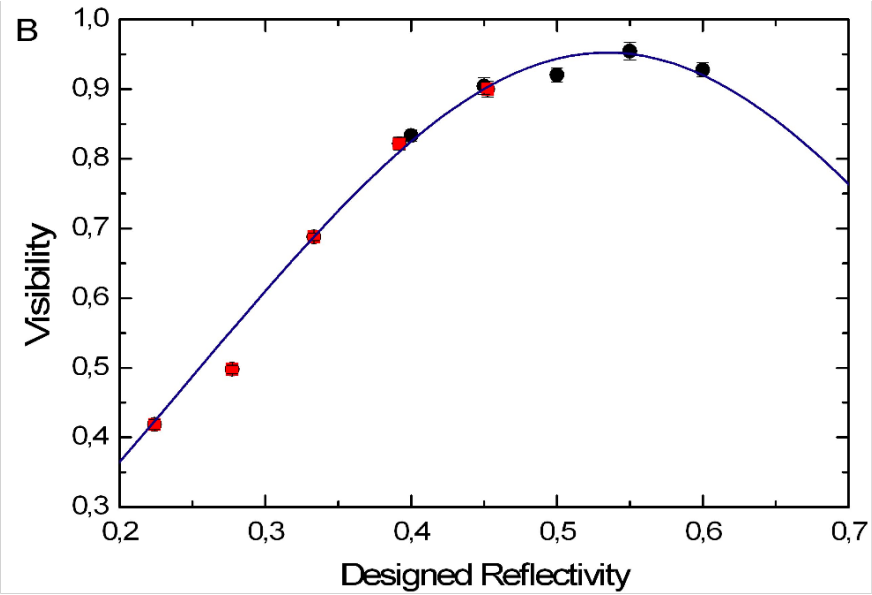

University of BRISTOL

A.Politi, M. J. Cryan, J. G. Rarity, S. Yu, and J. L. O'Brien
Science, **320**, 5876 (2008)

Quantum Coherence & Entanglement

$$|20\rangle - |02\rangle$$

Ideal:

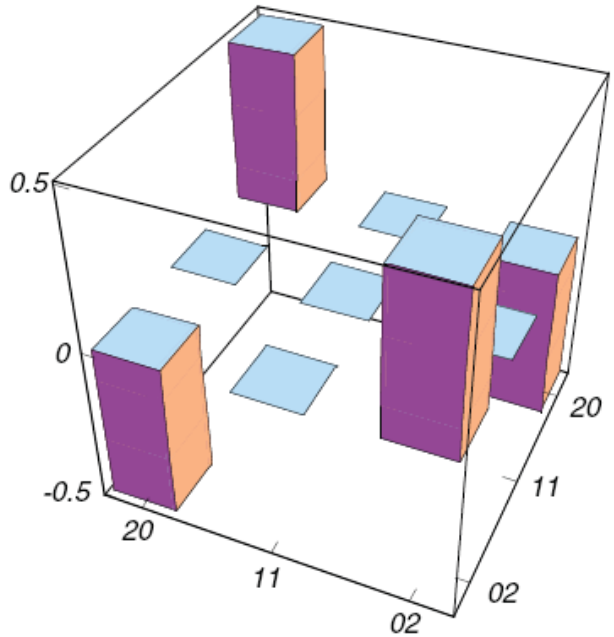

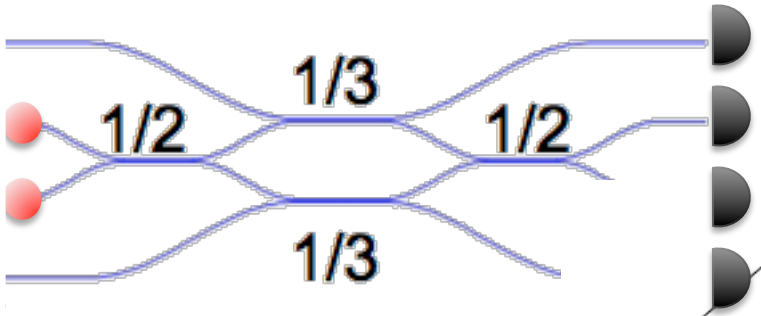

Measured:

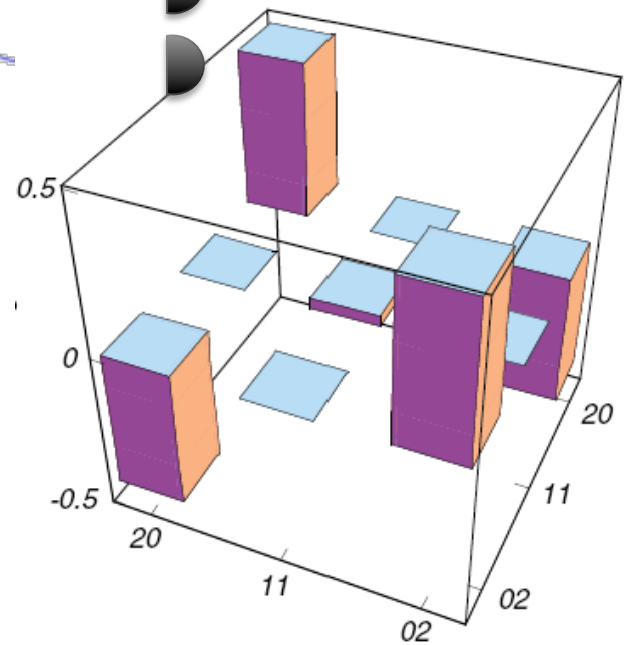

F > 92 %

A.Politi, M. J. Cryan, J. G. Rarity, S. Yu, and J. L. O'Brien
Science, **320**, 5876 (2008)

Reconfigurable Quantum Circuits

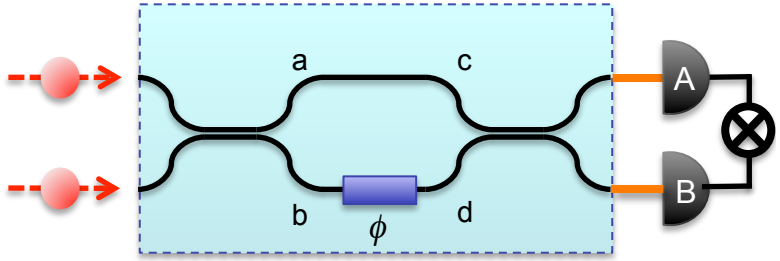

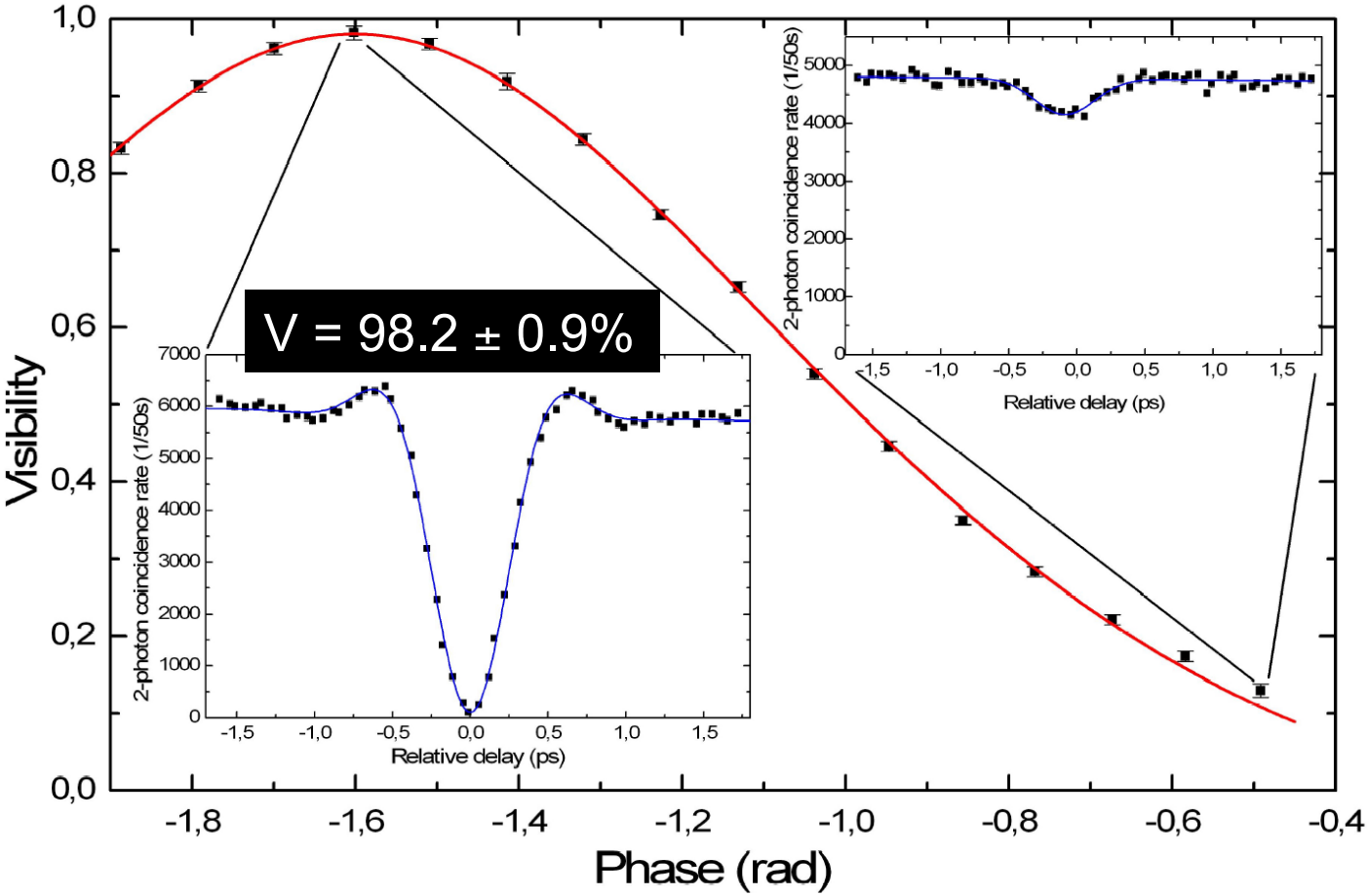

Matthews, Politi, Stefanov, O'Brien
***Nature Photonics* 3**, 346 (2009)

University of BRISTOL

Two-Photon Correlation Matrix

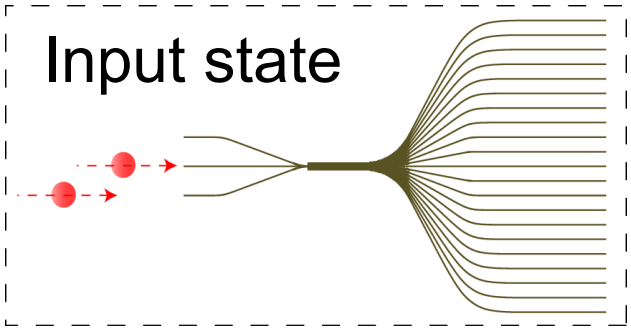

Experiment

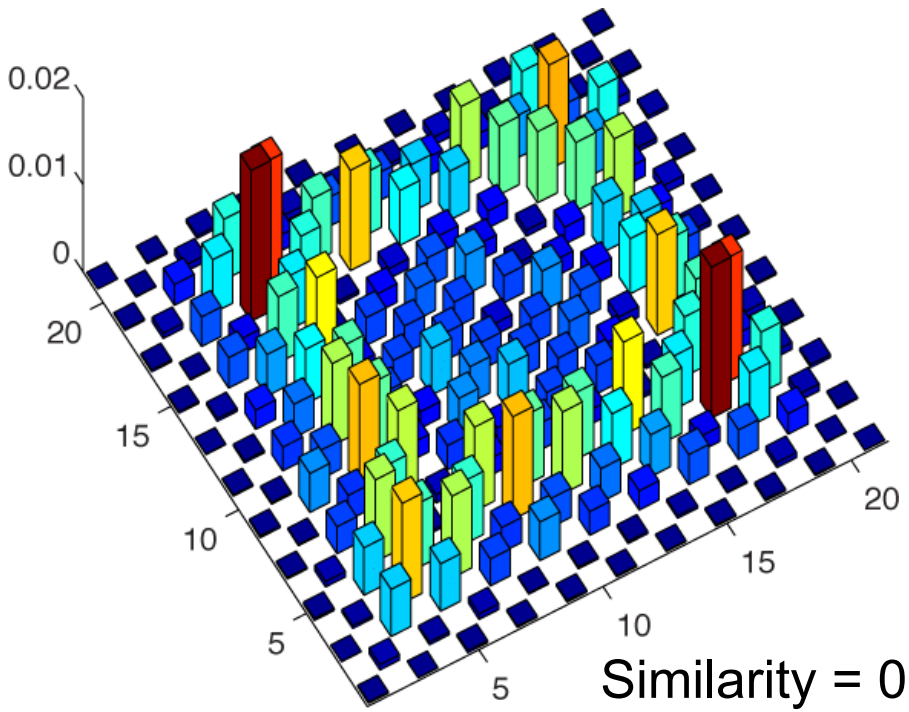

Simulation

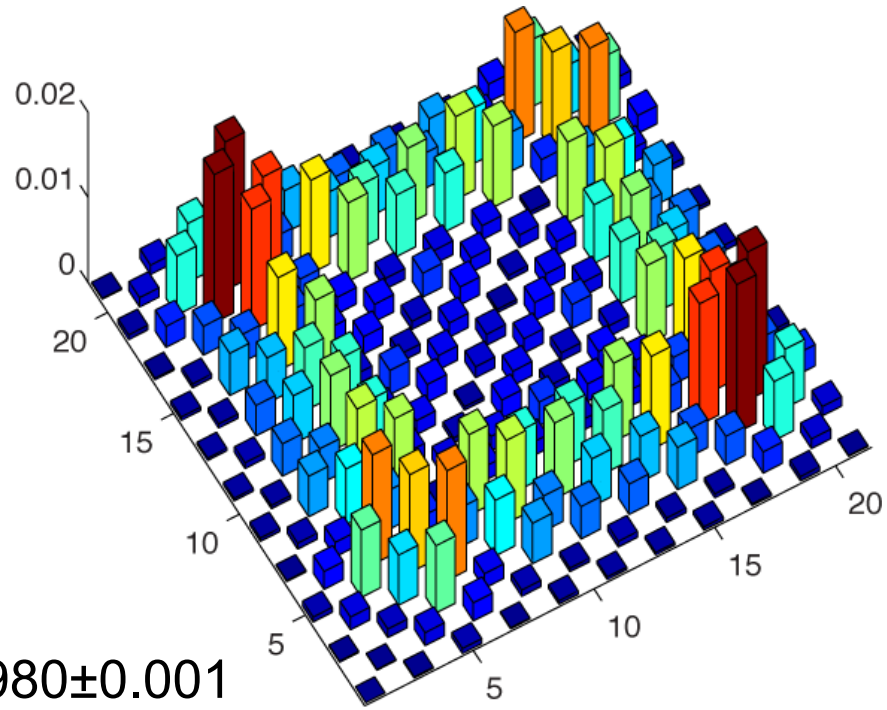

Similarity = 0.980±0.001

Peruzzo, Matsuda, Matthews, Politi, Poulios, Lobino, Zhou, Lahini, Ismail, Wörhoff, Bromberg, Silberberg, Thompson, O'Brien ***Science* 329** 1500 (2010)

University of BRISTOL

Two-Photon Correlation Matrix

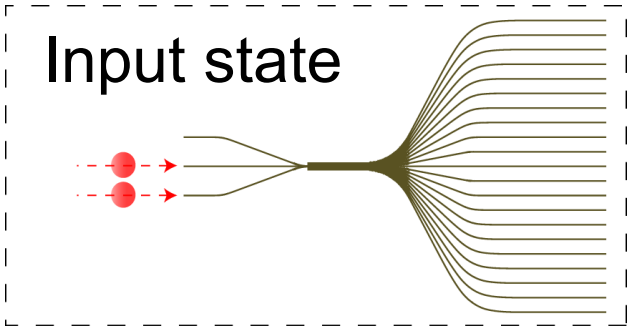

Experiment

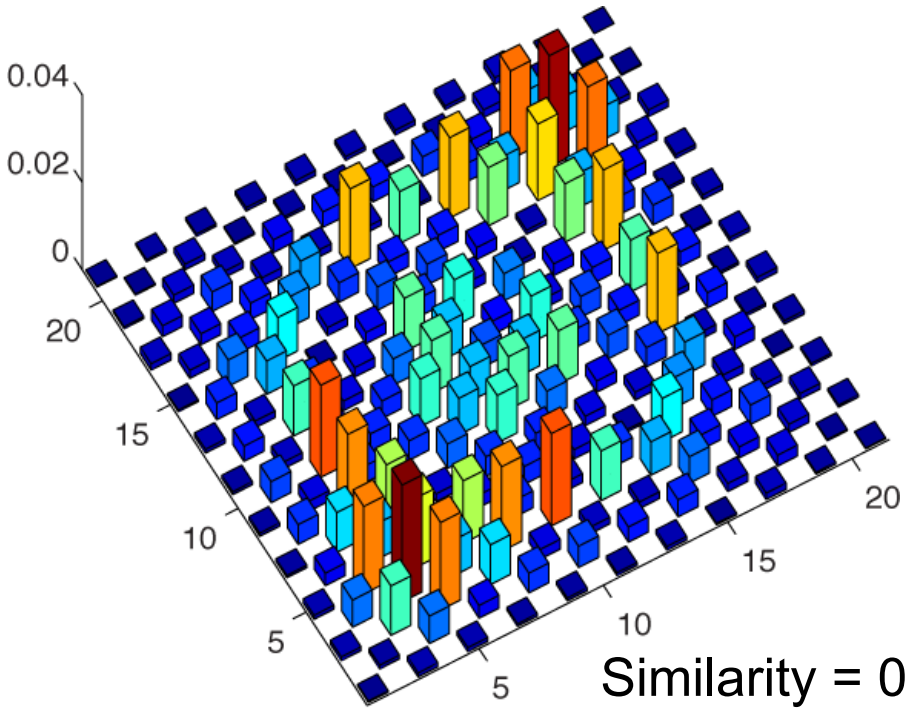

Simulation

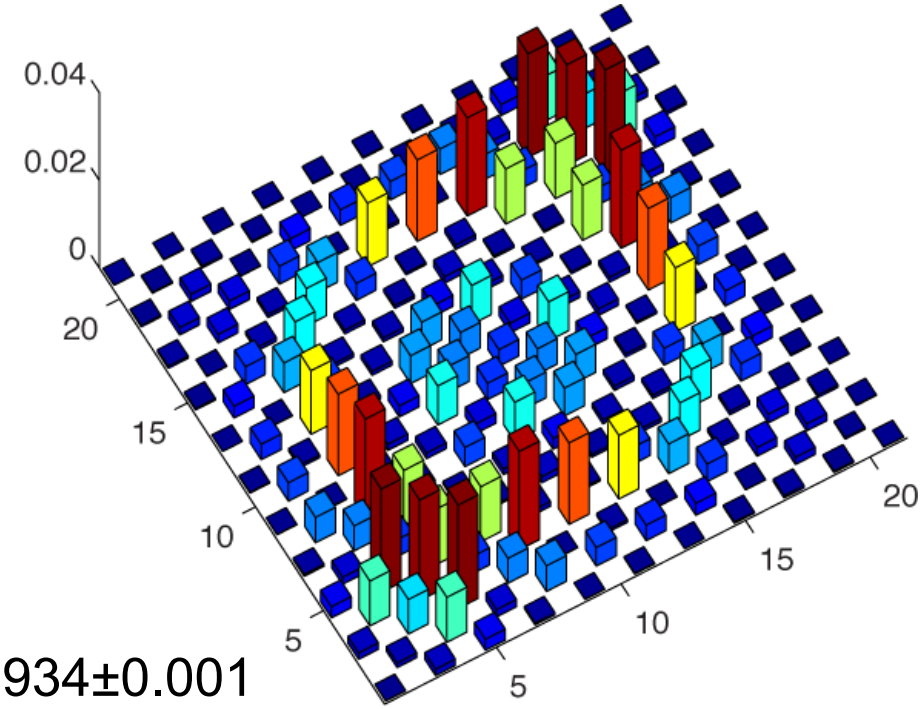

Similarity = 0.934±0.001

Peruzzo, Matsuda, Matthews, Politi, Poulios, Lobino, Zhou, Lahini, Ismail, Wörhoff, Bromberg, Silberberg, Thompson, O'Brien ***Science* 329** 1500 (2010)

University of BRISTOL

Two-Photon Correlation Matrix

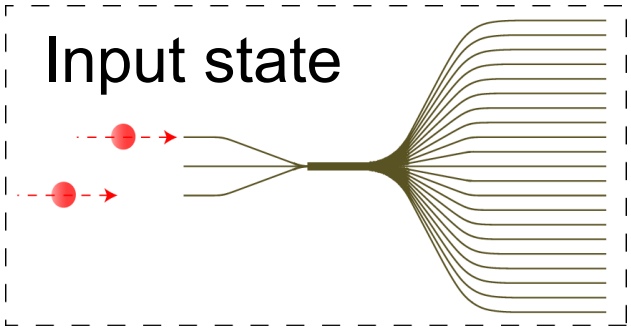

Experiment

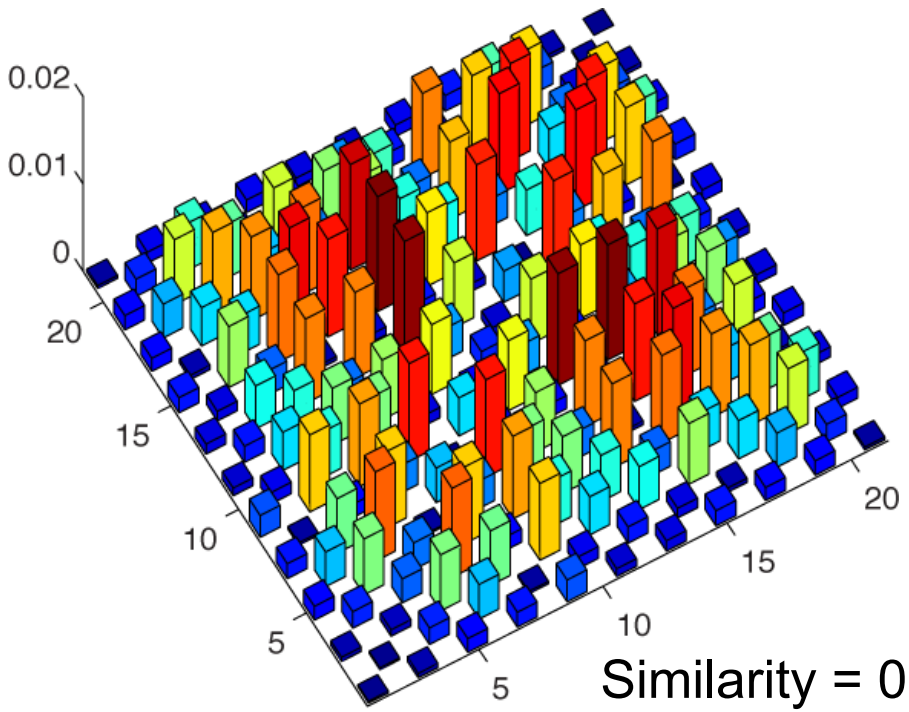

Simulation

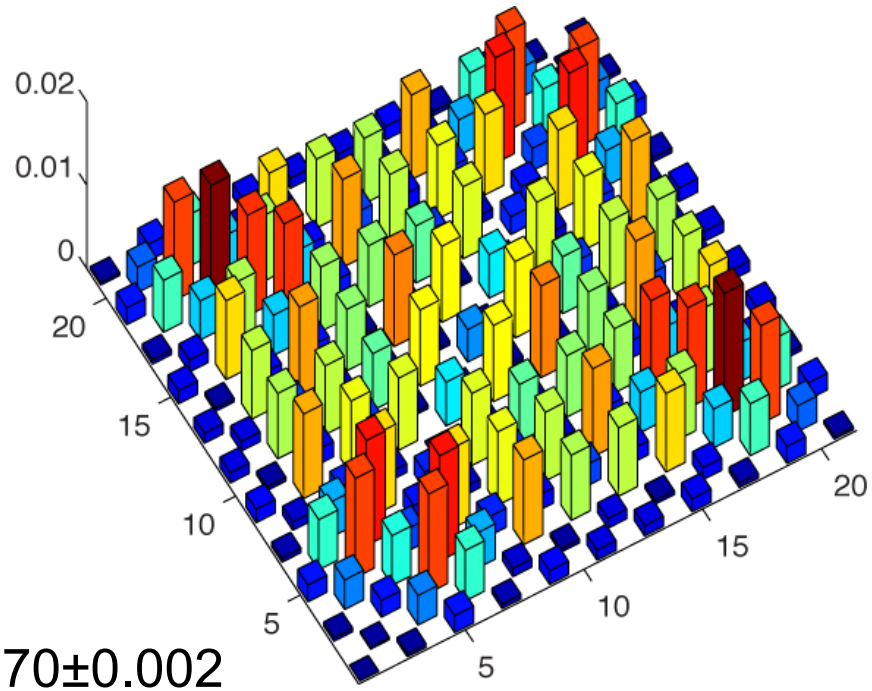

Similarity = 0.970±0.002

Peruzzo, Matsuda, Matthews, Politi, Poulios, Lobino, Zhou, Lahini, Ismail, Wörhoff, Bromberg, Silberberg, Thompson, O'Brien ***Science* 329** 1500 (2010)

University of BRISTOL

Two-Photon Correlation Matrix

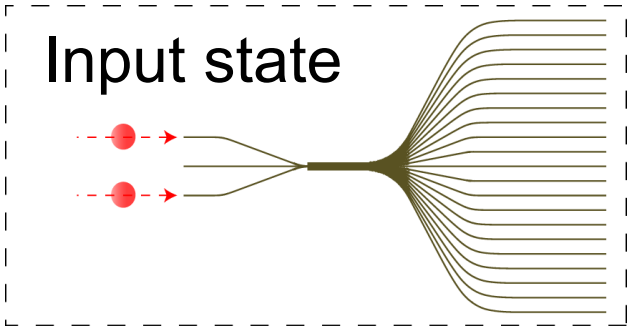

Experiment

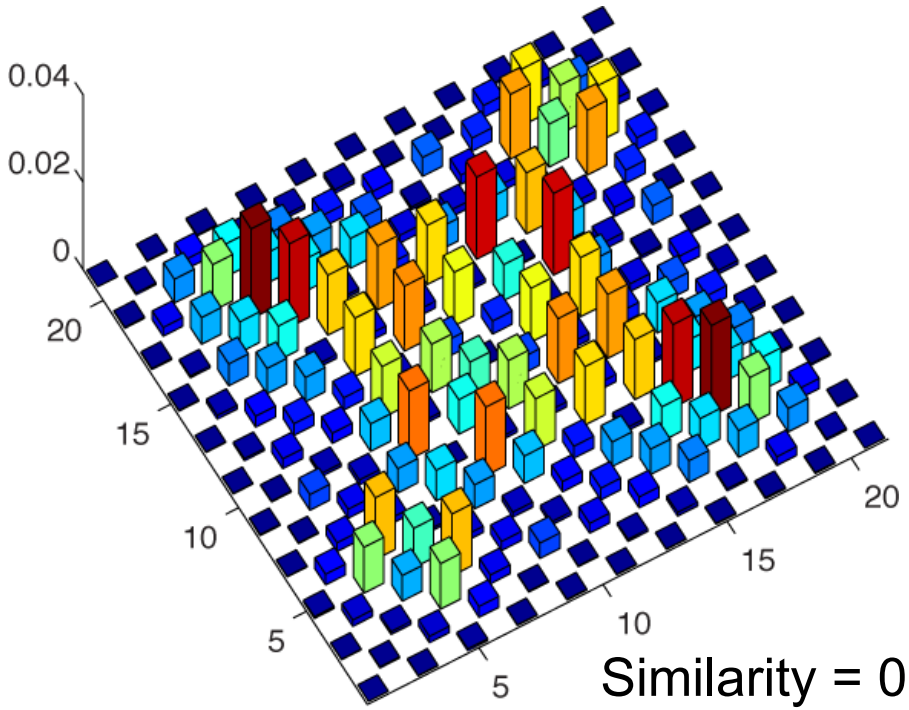

Simulation

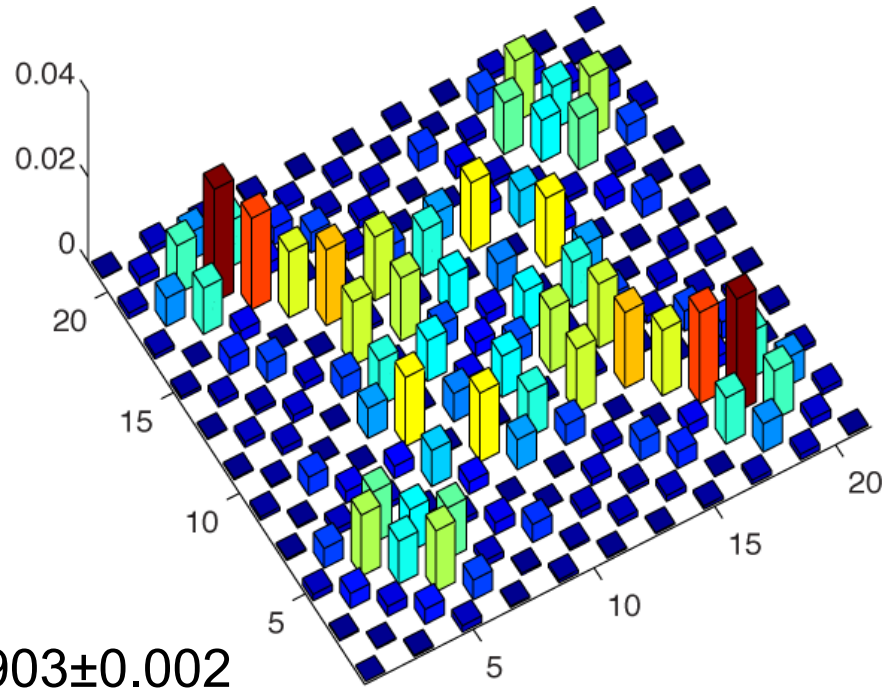

Similarity = 0.903±0.002

Peruzzo, Matsuda, Matthews, Politi, Poulios, Lobino, Zhou, Lahini, Ismail, Wörhoff, Bromberg, Silberberg, Thompson, O'Brien ***Science* 329** 1500 (2010)

University of BRISTOL

Two photon quantum walk

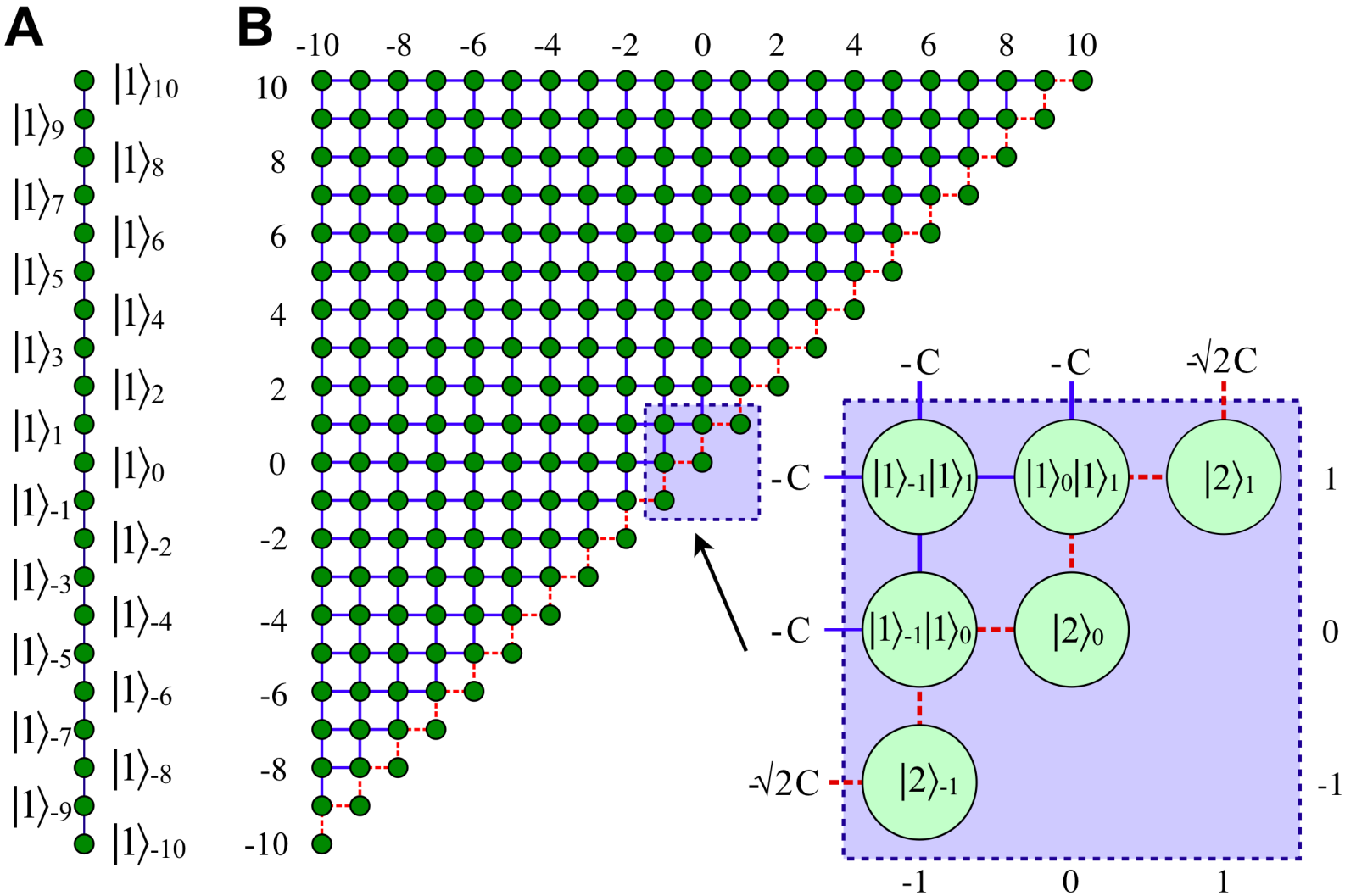

Peruzzo, Matsuda, Matthews, Politi, Poulios, Lobino, Zhou, Lahini, Ismail, Wörhoff, Bromberg, Silberberg, Thompson, O'Brien ***Science* 329** 1500 (2010)

University of BRISTOL

Waveguide photon sources

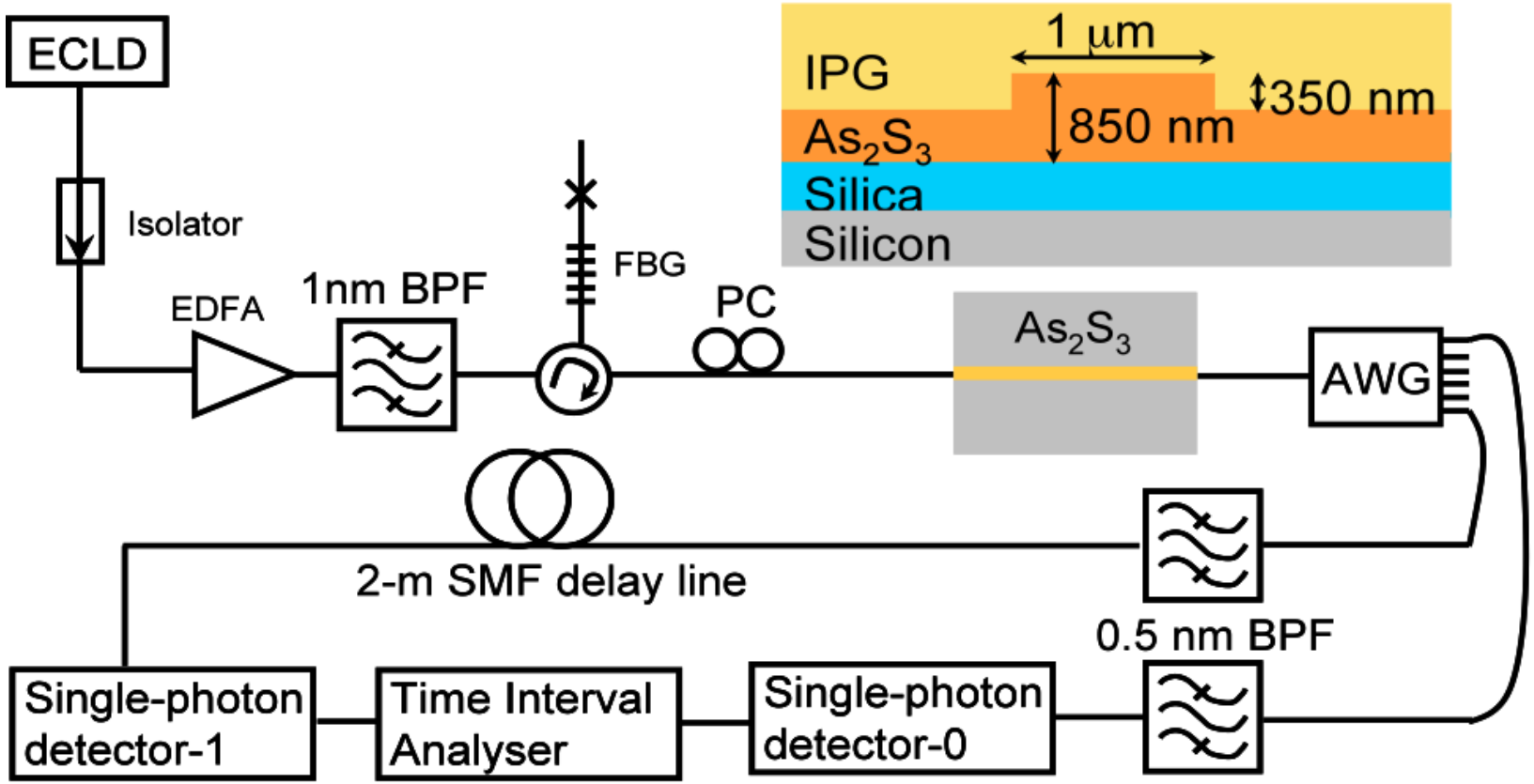

(& periodically poled lithium tantalate, Lobino *et al.*)

Xiong, *et al.* **arXiv:1011.1688**

Superconducting single photon detectors

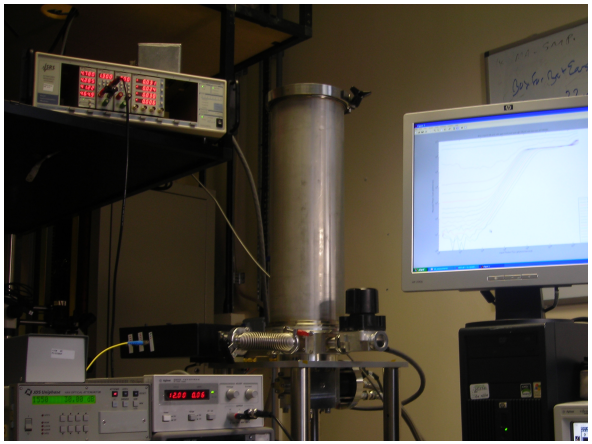

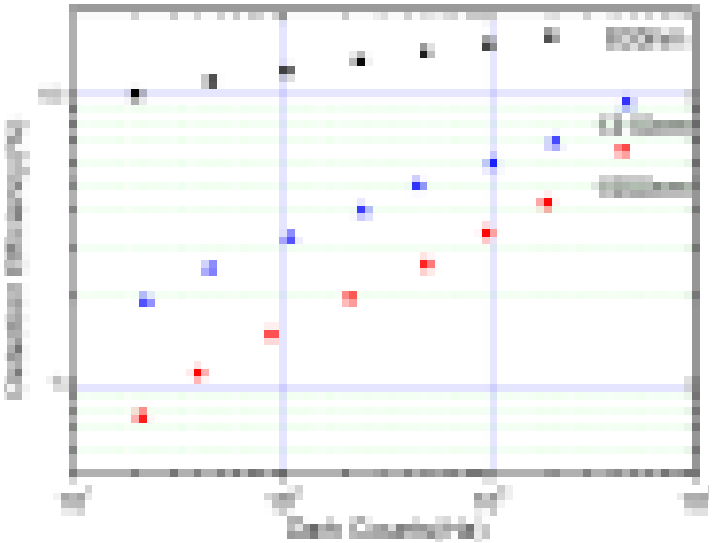

HOM:

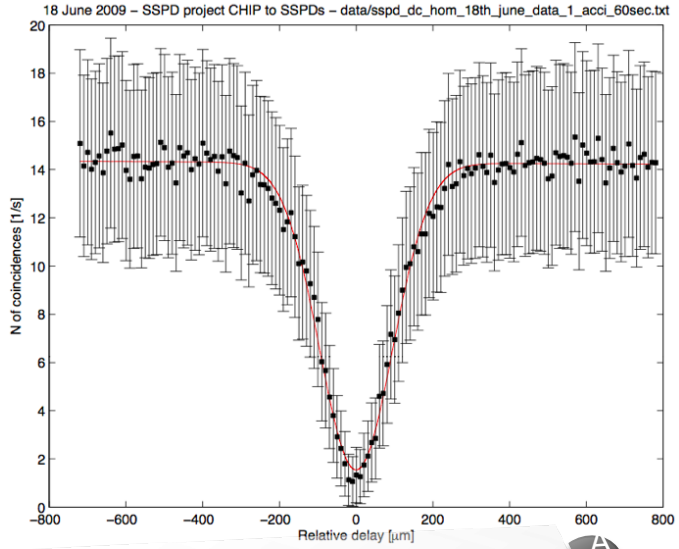

2NOON phase chip:

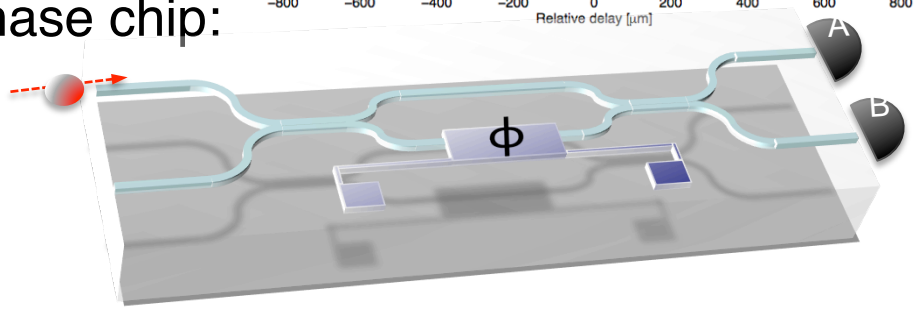

+ CNOT Chip:

Natarajan, Peruzzo, Miki, Sasaki, Wang, Baek, Nam, Hadfield O'Brien
***Appl. Phys. Lett.* 96**, 211101 (2010)

Quantum process discrimination

Imperial College London

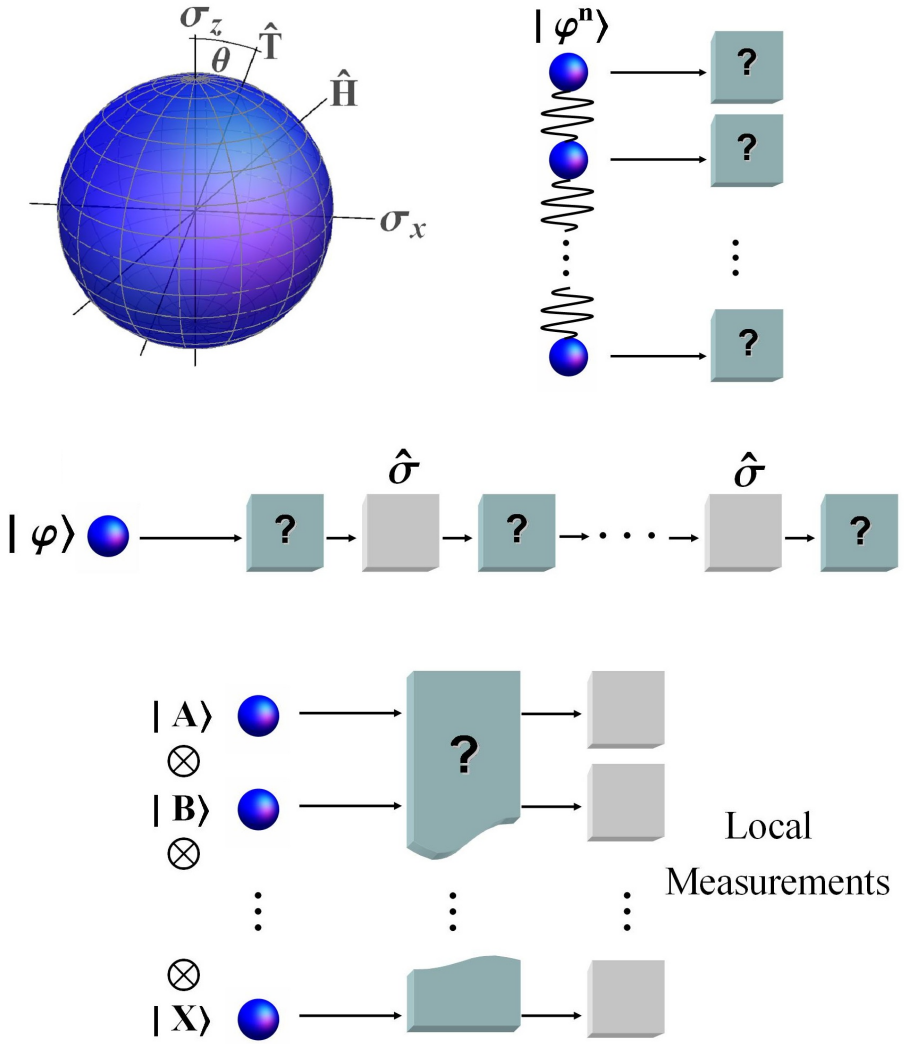

>97% correct discrimination

University of BRISTOL

Laing, Rudolph, and O'Brien
Phys. Rev. Lett. **102**, 160502 (2009)

The maximum violation reaches 76 standard deviations

Inequality Violations

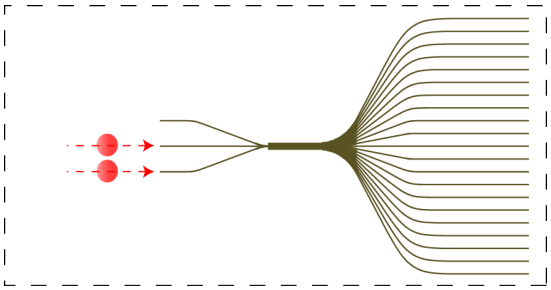

$$\Gamma^{(Cl)}_{q,r} > \frac{2}{3}\sqrt{\Gamma^{(Cl)}_{q,q}\Gamma^{(Cl)}_{r,r}}$$

Y. Bromberg, Y. Lahini, R. Morandotti, Y. Silberberg
Phys. Rev. Lett. **102**, 253904 (2009)

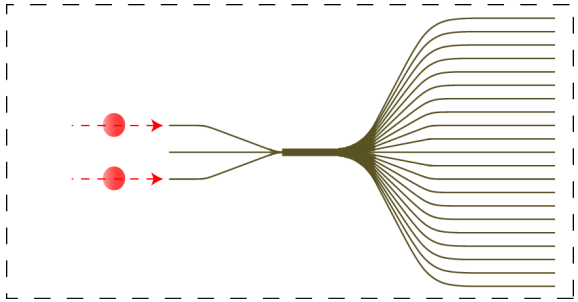

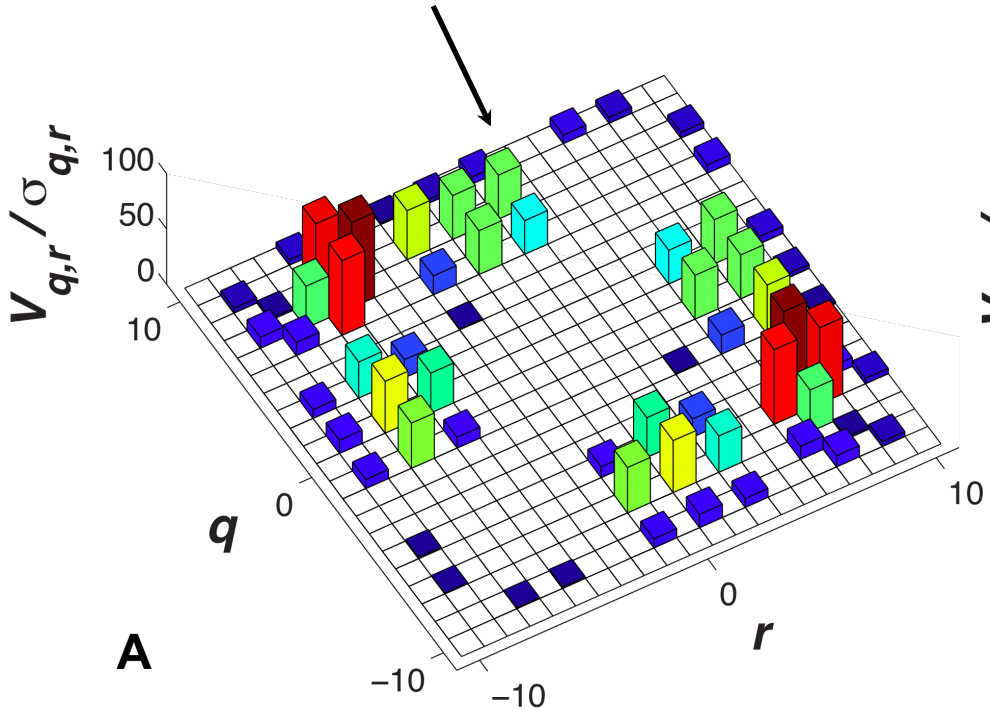

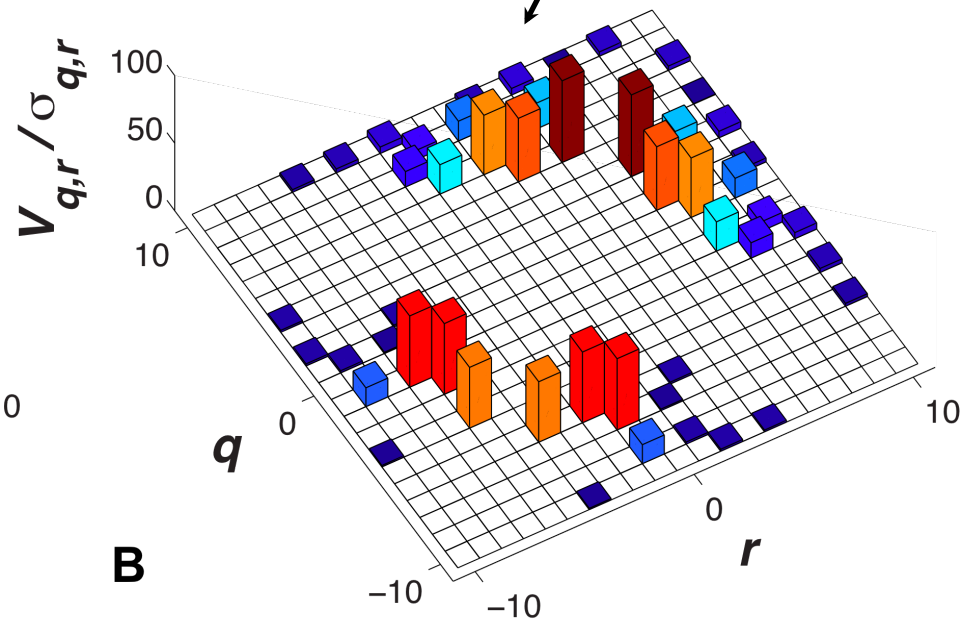

Peruzzo, Matsuda, Matthews, Politi, Poulios, Lobino, Zhou, Lahini, Ismail, Wörhoff, Bromberg, Silberberg, Thompson, O'Brien ***Science* 329** 1500 (2010)

University of BRISTOL

2: Heralded Entanglement

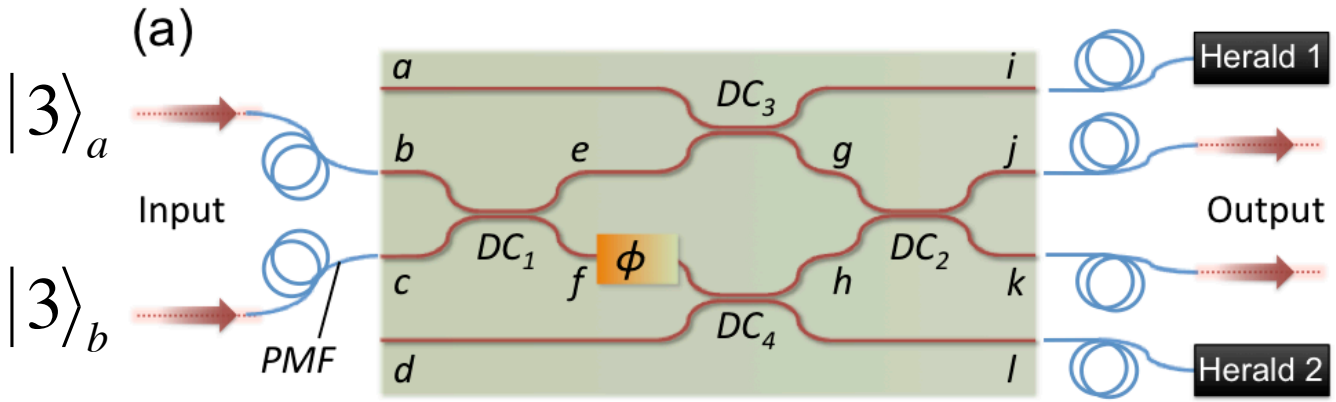

$$|4\rangle_j|0\rangle_k + |0\rangle_j|4\rangle_k$$

$$|3\rangle_j|1\rangle_k + |1\rangle_j|3\rangle_k$$

Matthews, Politi, Bonneau, O'Brien
arXiv:1005.5119

1: Heralded Entanglement

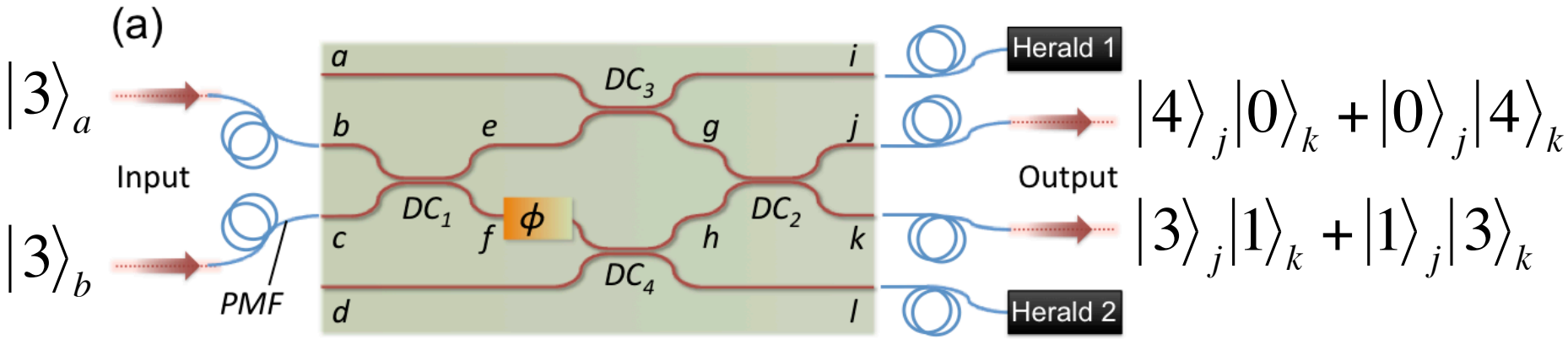

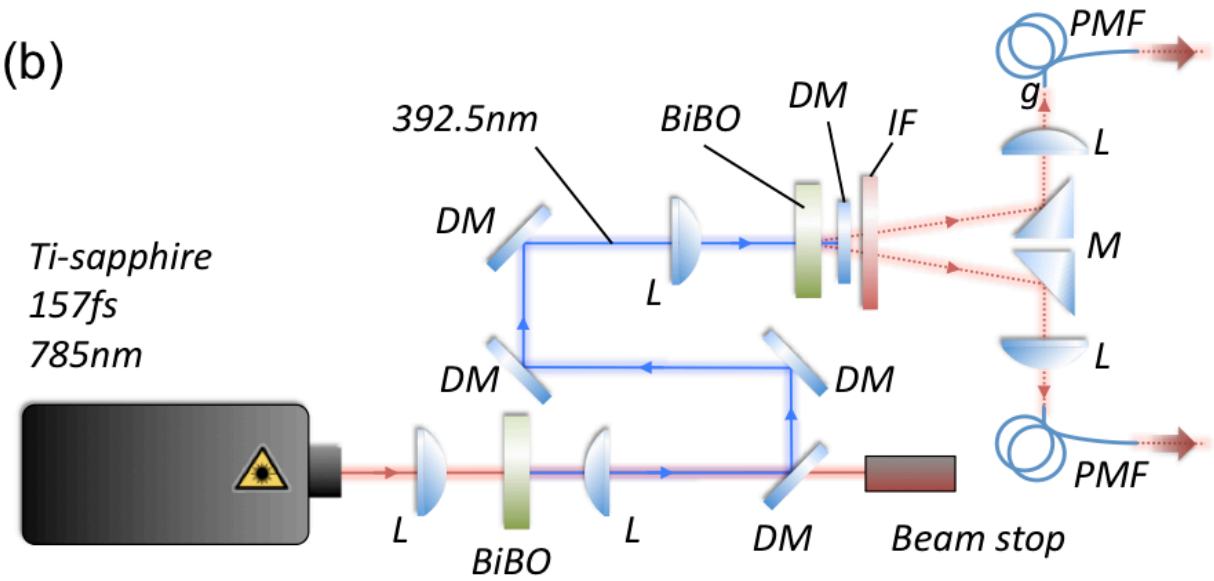

Matthews, Politi, Bonneau, O'Brien
arXiv:1005.5119

Directly-Written Fused Silica Waveguides

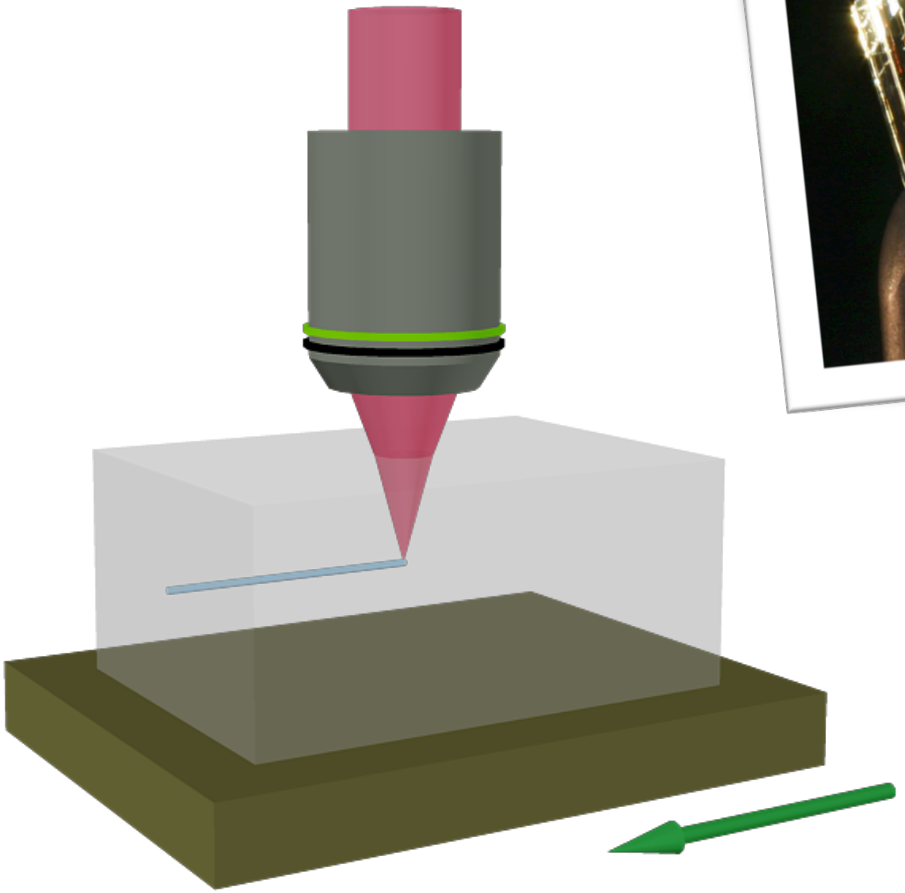

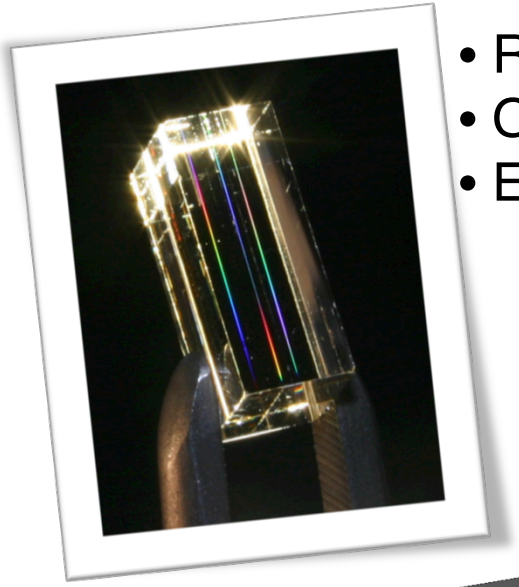

- Rapid: no lithographic mask
- Optically active materials
- Enables 3D architectures

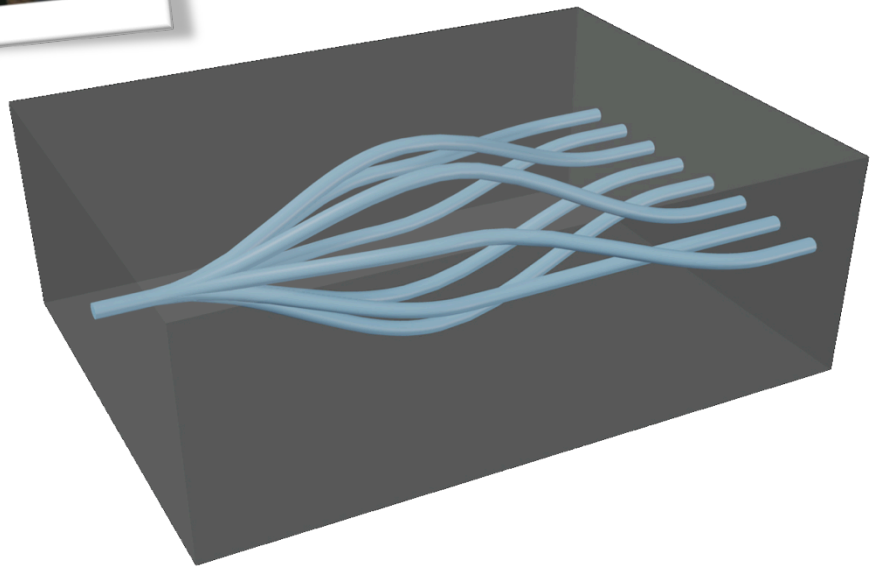

University of BRISTOL

K. M. Davis, K. Miura, N. Sugimoto, K. Hirao
Optics Lett, **21,** 21 (1996).

Non-Classical Performance

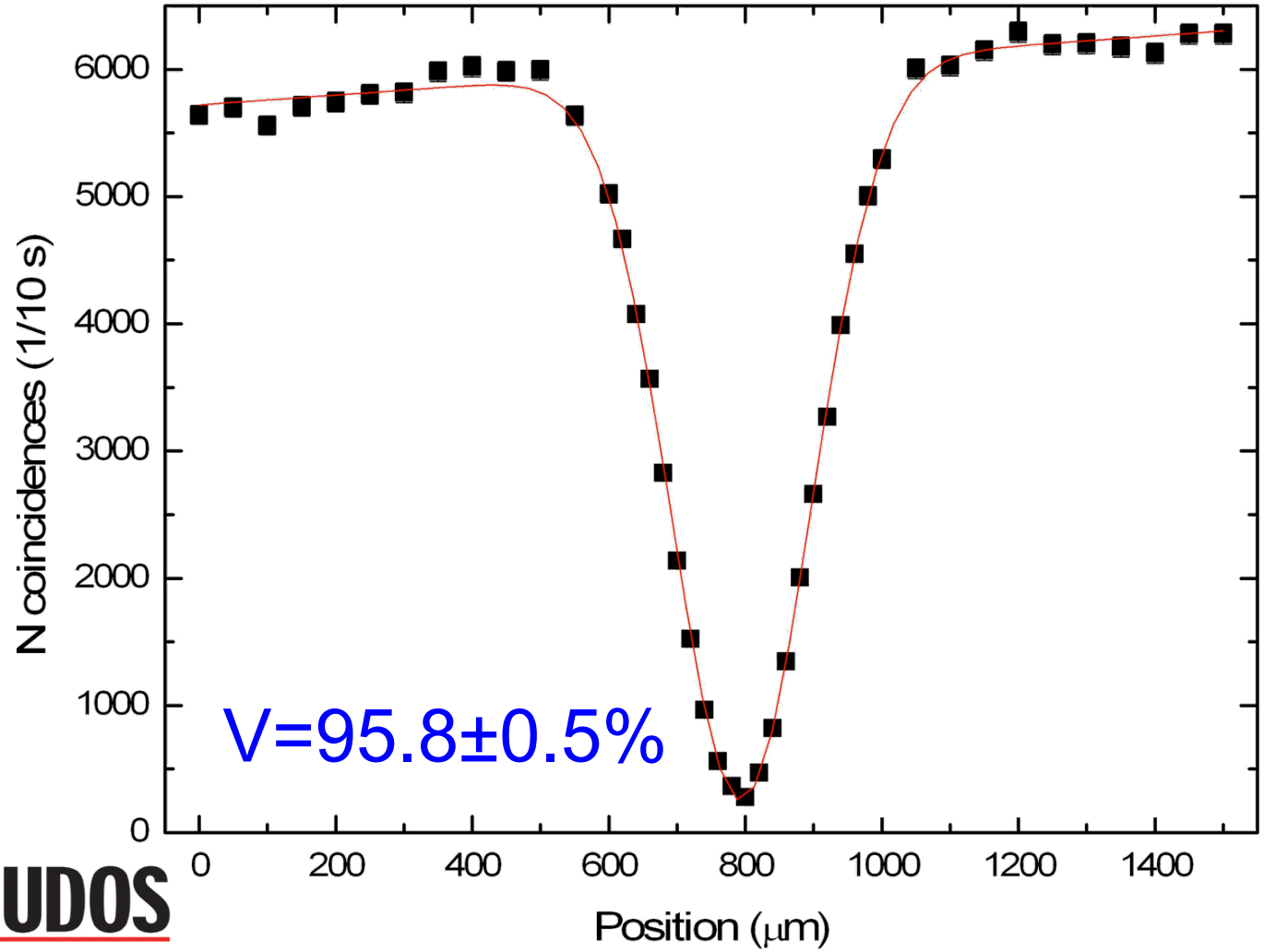

CUDOS

University of BRISTOL

Marshall, Politi, Matthews, Dekker, Ams, Withford, O'Brien
***Optics Express* 17**, 12546 (2009)

Non-Classical Performance

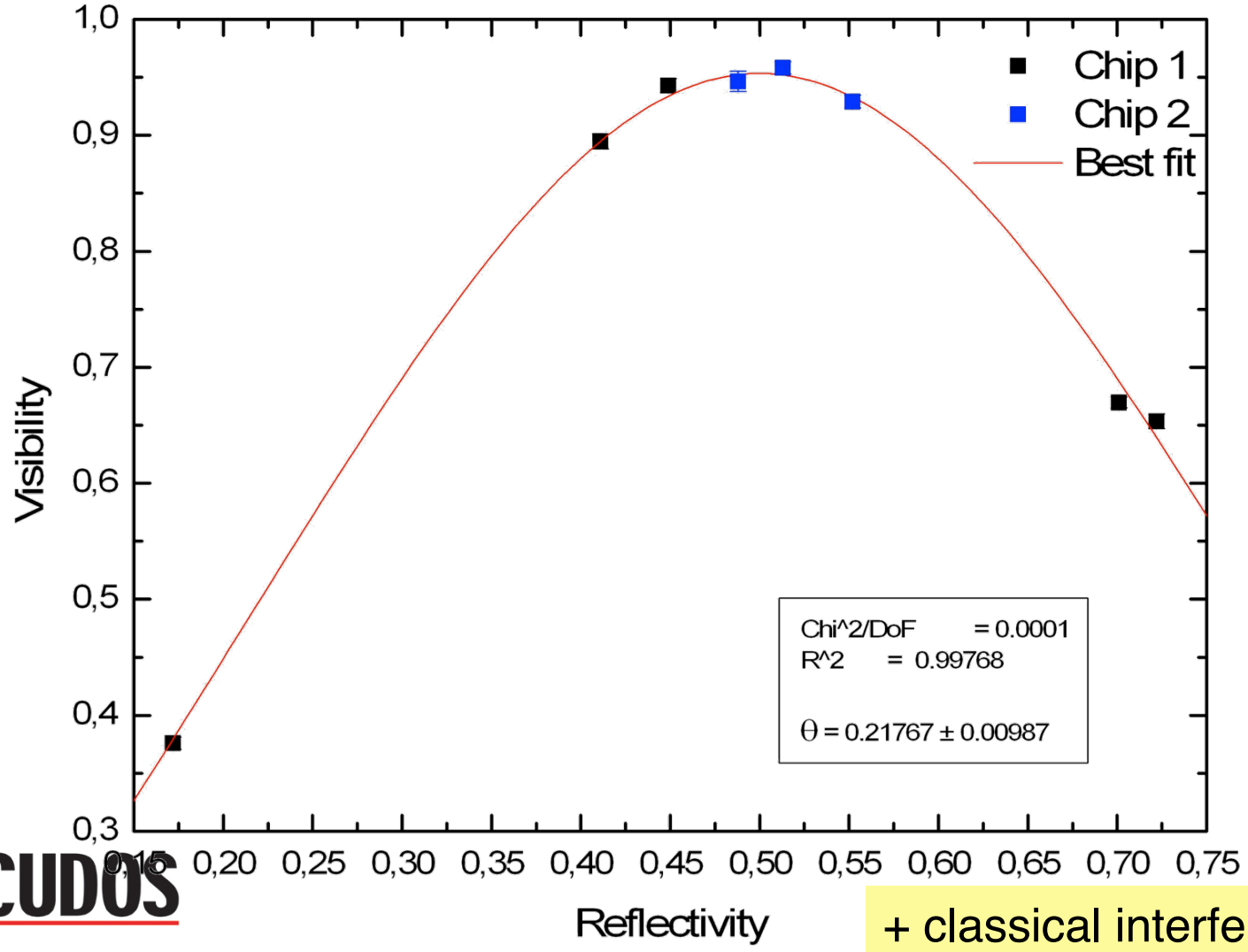

+ classical interferometers

Marshall, Politi, Matthews, Dekker, Ams, Withford, O'Brien
***Optics Express* 17**, 12546 (2009)

Integrated Optical Phase Control

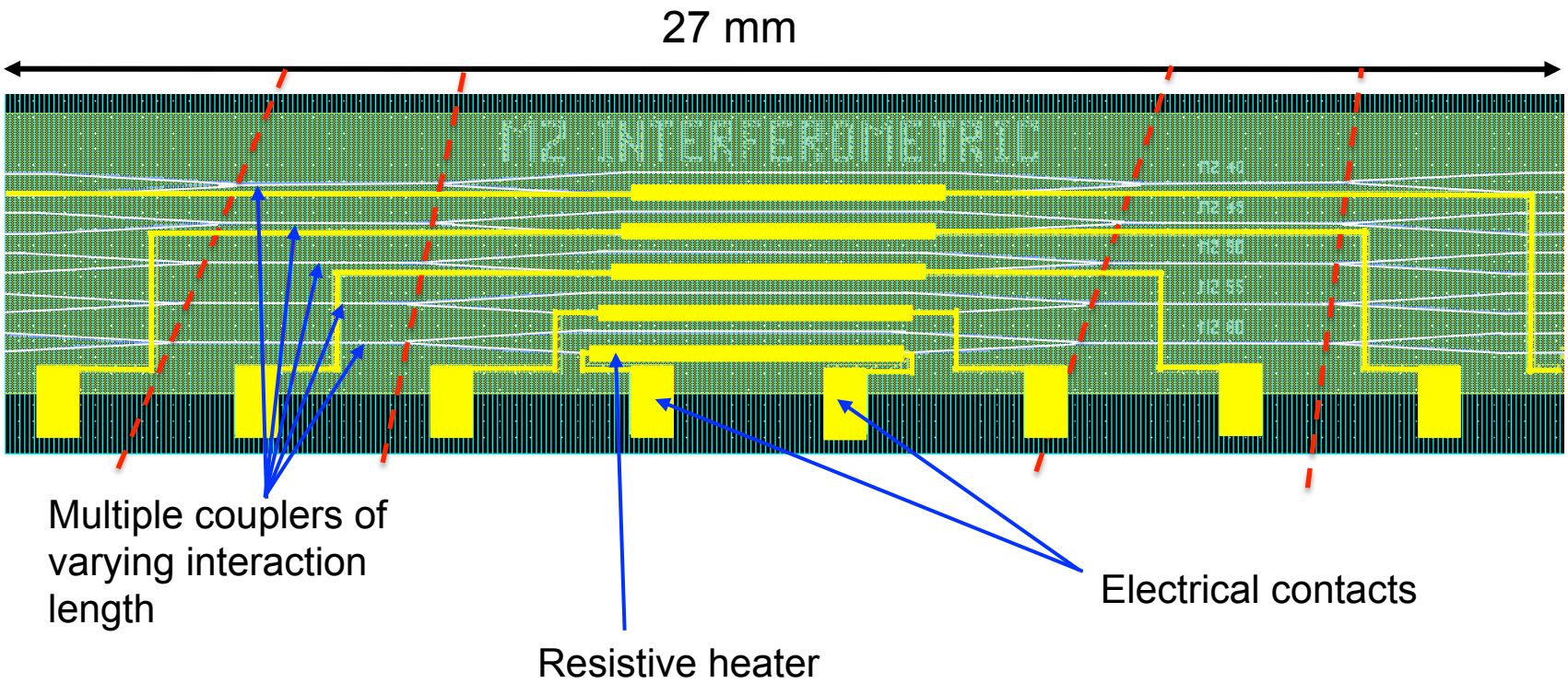

Voltage applied across resistive heaters varies phase in Mach Zehnder.

Matthews, Politi, Stefanov, O'Brien
***Nature Photonics* 3**, 346 (2009)

Coupling into Waveguides

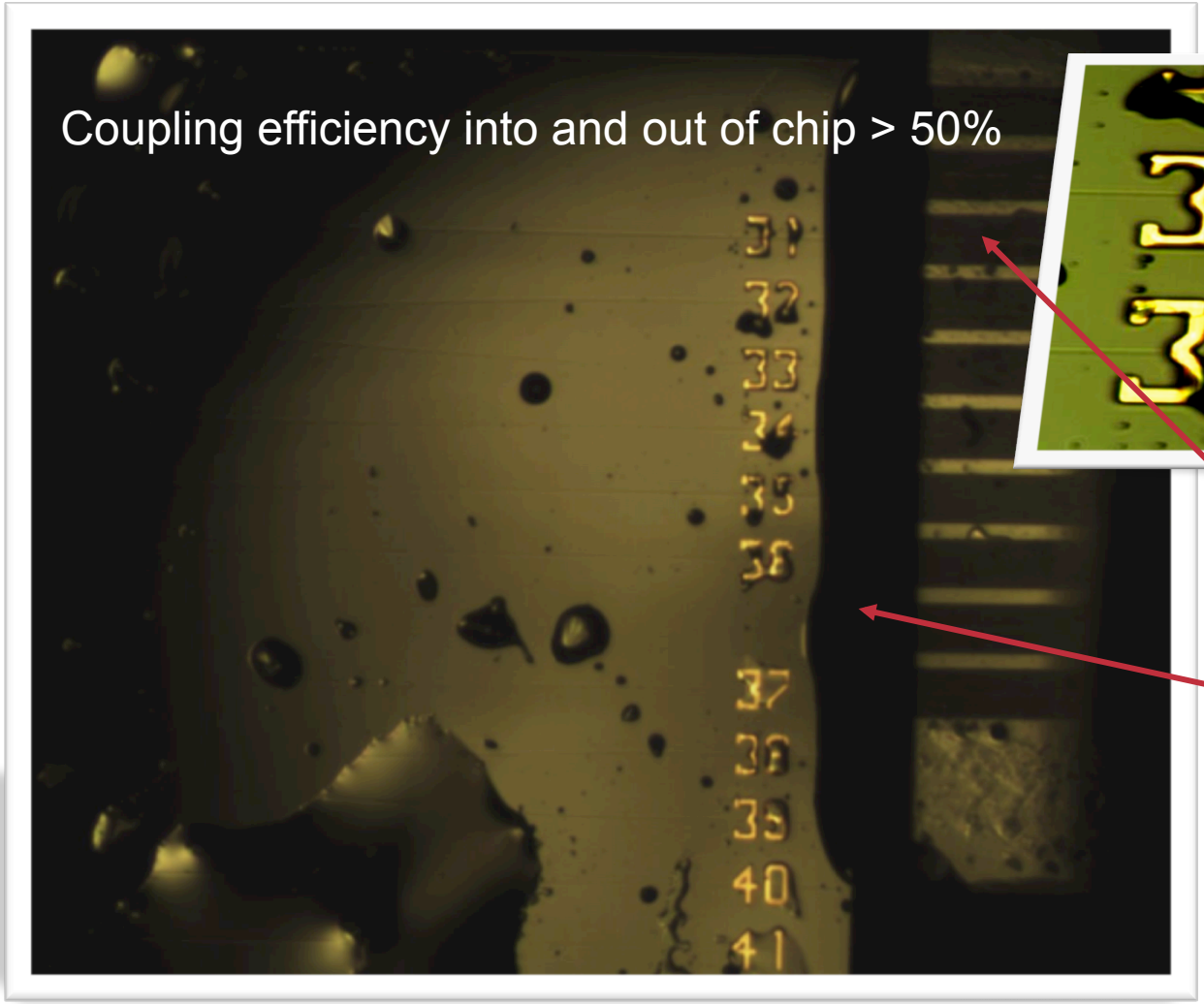

Optical fibre array

Matched Index Liquid

University of BRISTOL

A.Politi, M. J. Cryan, J. G. Rarity, S. Yu, and J. L. O'Brien
Science, **320**, 5876 (2008)
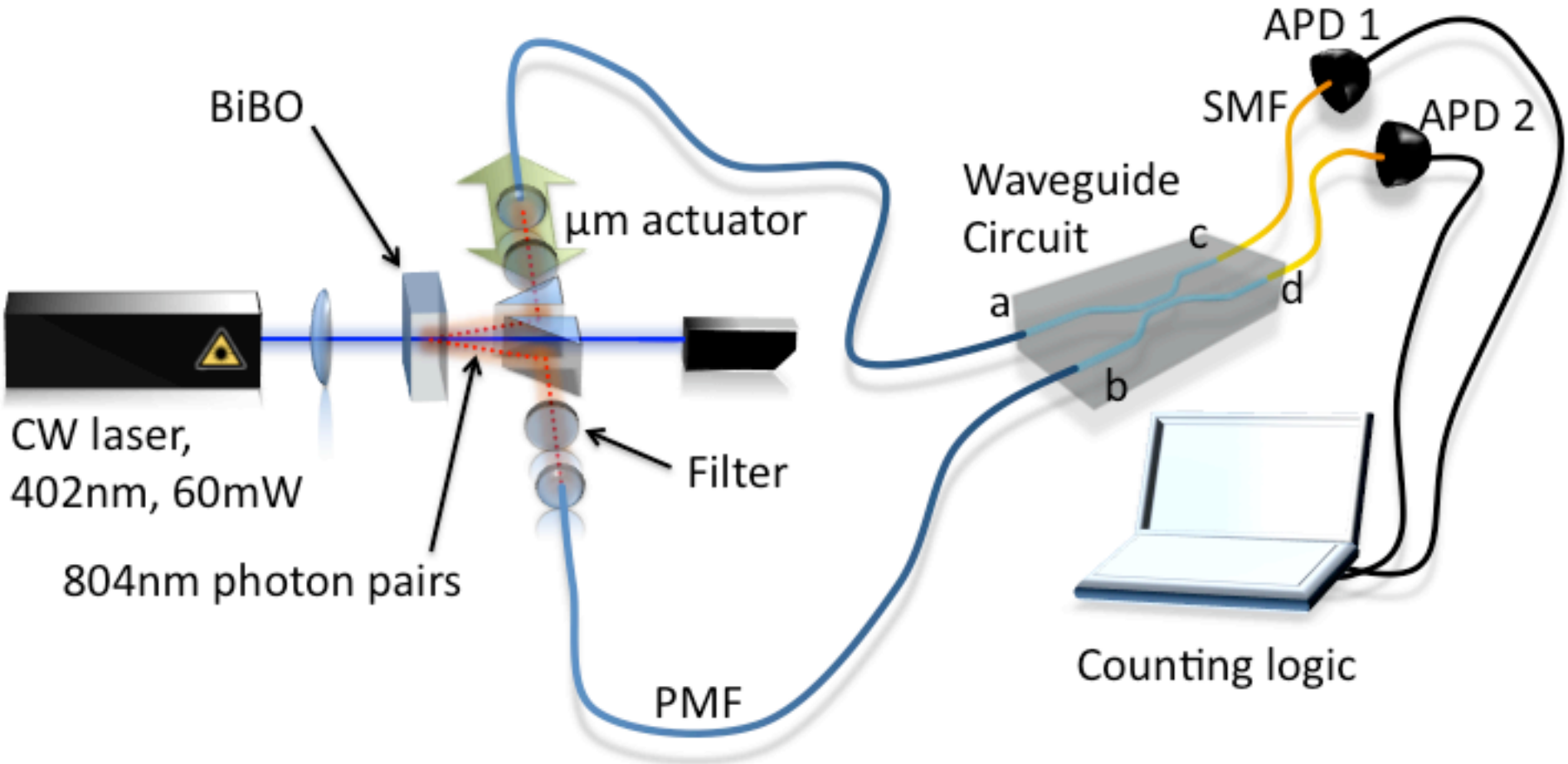
Experimental setup